VILLAGE COUNCIL
AGENDA FOR WORK SESSION OF APRIL 13, 2021
ASSEMBLY HALL
395 MAGNOLIA ROAD
PINEHURST, NORTH CAROLINA

IMMEDIATELY FOLLOWING THE REGULAR MEETING

1. Call to Order.

2. Other Work Session Business.

3. Potential Future Agenda Items.

4. Discuss Public Comment Procedures

5. Discuss Ordinance #21-06 for Proposed Amendment to the Pinehurst Development Ordinance

6. Motion to Recess the Work Session and Enter Closed Session.

   Council will hold a closed session pursuant to NCGS §143-318.11(a)(3) To consult with an attorney employed or retained by the public body in order to preserve the attorney-client privilege between the attorney and the public body, which privilege is hereby acknowledged.

7. Motion to Adjourn the Closed Session and Re-Enter the Work Session.

8. Adjournment.

Vision: The Village of Pinehurst is a charming, vibrant community which reflects our rich history and traditions.
Mission: Promote, enhance, and sustain the quality of life for residents, businesses, and visitors.
Values: Service, Initiative,Teamwork, and Improvement.

IMMEDIATELY FOLLOWING THE REGULAR MEETING

ADDITIONAL AGENDA DETAILS:
IMMEDIATELY FOLLOWING THE REGULAR MEETING

DISCUSS PUBLIC COMMENT PROCEDURES
ADDITIONAL AGENDA DETAILS:

FROM:
Kelly Chance

CC:
Jeff Sanborn

DATE OF MEMO:
4/6/2021

MEMO DETAILS:
Attached is a draft of the Public Comment Policy and draft of the resolution to accept for discussion.

ATTACHMENTS:

Description
Public Comment Proposed Policy
Proposed Resolution

	VILLAGE OF PINEHURST **STANDARD PROCEDURE**	
SUBJECT:	Public Comment Policy	Effective: April 13, 2021
Department:	Administration	Policy No.: --
Prepared by:	Kelly Chance	Revised:
Approved by:	Village Council	# of Pages: 2

PURPOSE: The purpose of this policy is to:

Create a procedure, in accordance with North Carolina General Statute 160A-81.1, to allow members of the public to address the Village of Pinehurst Council.

POLICY: The Village of Pinehurst Village Council is committed to allowing members of the public an opportunity to offer comments and suggestions to the Village Council for the efficient and effective administration of government. In addition to public hearings, special time is set aside for receiving such comments and suggestions. All comments and suggestions addressed to the Council during Public Comment Periods shall be subject to the following procedures:

- Persons who wish to address the Council during this Public Comment Period will register on a sign-up sheet available on a table inside the entrance door to Assembly Hall indicating contact information and topic. A sign-up sheet will be available beginning thirty (30) minutes before the start of the meeting. No one will be allowed to have his/her name placed on the list by telephone request to Village Staff.
- There will be thirty (30) minutes allocated to the Public Comment Period. Each person signed up to speak will have three (3) minutes to make his/her remarks and will only be entitled to the time allotted to each speaker and one additional time period which may be yielded to him/her by another individual who has also signed up to speak on a particular topic.
- If the thirty (30) minutes allocated to the Public Comment Period have not expired after the individuals who have signed up have spoken, the Mayor, or presiding officer, will ask if any other persons wish to address Council.
- Public comments submitted by email will be read by the Village Clerk, Mayor, or presiding officer during the remaining thirty (30) minutes allocated. If there are

numerous emails, or the contents of an individual email is lengthy, the Village Clerk, Mayor, or presiding officer, at their discretion, may summarize the content.

- Speakers will be acknowledged by the Mayor, or other presiding officer, in the order in which their names appear on the sign-up sheet. Speakers will address the Council from the lectern at the front of the room and begin their remarks by stating their name, address, and the topic to be addressed.
- Public comment is not intended to require the Council to answer any impromptu questions. Speakers will address all comments to the Council as a whole and not one individual Councilmember, nor to the attending public. Discussions between speakers and members of the audience will not be allowed.
- Speakers shall only discuss matters that are pertinent to the legal authorities of the Village of Pinehurst.
- Speakers will be courteous in their language and presentation. Matters or comments which are harmful, discriminatory or embarrassing to any citizens, official or employee of the Village of Pinehurst shall not be allowed. Speakers must be respectful and courteous in their remarks and must refrain from personal attacks and the use of profanity.
- Speakers who have prepared written remarks or supporting documents are encouraged to leave a copy of such remarks and documents with the Village Clerk.
- Speakers shall not discuss any of the following: matters which concern the candidacy of any person seeking public office, including the candidacy of the person addressing the Council; matters which are closed session matters, including but not limited to matters within the attorney-client privilege, anticipated or pending litigation, personnel, property acquisition, matters which are made confidential by law; matters which are the subject of public hearings.

Approved by:

John C. Strickland, Mayor	Date
Resolution # 20- 07	
Village Council, Resolution	Date

RESOLUTION #21-07:

A RESOLUTION ADOPTING A PUBLIC COMMENT POLICY FOR THE VILLAGE OF PINEHURST.

WHEREAS, the Village Council of Pinehurst, North Carolina, is desirous of creating a process for allowing members of the public an opportunity to offer comments and suggestions to the Village Council for the efficient and effective administration of government; and

WHEREAS, the Public Comment Policy is in accordance with North Carolina General Statute 160A-81.1;

NOW, THEREFORE, BE IT RESOLVED by the Village Council of the Village of Pinehurst, North Carolina in a regular meeting assembled this 13th day of April, 2021 as follows:

SECTION 1. That the Public Comment Policy is hereby adopted; said policy attached hereto as Attachment A and made a part hereof; the same as if included verbatim.

THIS RESOLUTION passed and adopted this 13th day of April, 2021.

VILLAGE OF PINEHURST
VILLAGE COUNCIL

(Municipal Seal)

By: _____
John C. Strickland, Mayor

Attest:

_____
Kelly Chance, Village Clerk

Approved as to Form:

_____
Michael J. Newman, Village Attorney

DISCUSS ORDINANCE #21-06 FOR PROPOSED AMENDMENT TO THE PINEHURST DEVELOPMENT ORDINANCE

ADDITIONAL AGENDA DETAILS:

FROM:
Darryn Burich & Alex Cameron

CC:
Jeff Sanborn and Natalie Hawkins

DATE OF MEMO:
4/8/2021

MEMO DETAILS:
This agenda item follows the March 23rd Council public hearing on proposed amendments to the Pinehurst Development Ordinance (PDO) that generally relate to establishment of buffer yards for development activity.

During deliberation of the proposed text amendments, various issues were raised that Council felt required additional discussion relative to potential modifications to ordinance language prior to consideration for adoption.

It is purpose of the work session to discuss the concerns raised to provide staff with direction on potential adjustments to draft ordinance language. Staff has prepared a decision document titled "Buffer Standards Modification document" to assist Council discussion, which is included as background material in this agenda item. Also included is the proposed draft ordinance and background material.

ATTACHMENTS:

Description
Buffer Ordinance Council Options document
Draft Ordinance
3.23.21 Staff Council Memo
Public Comments

Village of Pinehurst
Proposed Buffer Development Standards/Modifications Document

There are five (5) key areas where staff would like to reach Council consensus on potential changes to the buffer development standards. These are the same issues included in the March 17th staff memo that was part of the March 23rd work session agenda item. Please review the DRAFT ordinance (see email attachment) and each of the five issues described below where staff needs Council consensus and direction. After evaluating alternative options, please indicate with an "X" which option you personally prefer. **Submit your response to Darryn Burich no later than 5:00 pm on Monday, April 12th.** Staff will accumulate individual Council preferences and present the consolidated "votes" for Council to review and discuss in the April 13th work session.

Issue No. 1: Tree Spacing/Grouping **(Section 9.5.1.4 & 9.14.6 C)**
Concerns Raised: Adequate room for required plantings, impact on building footprint, and grading.
Staff Recommendation: Option 2

Option	Pros	Cons	Indicate Preferred Option with an "X'
Option 1: Leave Unchanged	More uniformity in buffer yards	Less design flexibility	
Option 2: Allow for grouping and spacing of newly planted trees	Increases design flexibility	Less "uniformity" for buffers	
Option 3: Increase the 35 foot linear foot maximum to allow "vistas" to be created.	Increases design flexibility	Less "uniformity" for buffers	
Option 4: No spacing requirements just plant required number of trees.	Increases design flexibility	Less "uniformity" for buffers	

Issue No. 2: Linear street frontage ratio of 1/15 feet
Concerns Raised: Would result in too many trees on street frontage that would screen homes
Staff Recommendation: Option 1

Option	Pros	Cons	Indicate Preferred Option with an "X'
Option 1: Leave Unchanged	Maintains street tree lined corridors	Higher numbers for planted or preserved trees	
Option 2: Decrease Ratio	Less costly and flexibility to plant	Less trees along street frontages	
Option 3: Additional Driveway credit of 20 feet to reduce ratio	Less costly and flexibility to plant	Less overall number of street trees	

Issue No. 3: 50% of planted trees to be Longleaf Pines (Section 9.14.6-C2) **Concerns Raised**: Plant/tree selection is a personal choice and potential loss rate **Staff Recommendation**: Option 1			
Option	**Pros**	**Cons**	**Indicate Preferred Option with an "X'**
Option 1: Leave Unchanged	More Longleaf Pines in the community	Less design flexibility, higher costs, and subject to loss from disease.	
Option 2: Apply to front and street side yards only	More pines along streets	Less pines in the community	
Option 3: Allow any tree listed on Appendix F of PDO	More design flexibility	Less pines in the community	

Issue No. 4: Tree survey requirements for clearing and grading applications (**Section 9.5.1.3**) **Concerns Raised:** Cost of surveys and constrains who can document compliance **Staff Recommendation**: Option 2			
Option	**Pros**	**Cons**	**Indicate Preferred Option with an "X'**
Option 1: Leave Unchanged (require a tree survey)	More precise inventory of conditions for future design	More costly and constrains who can document compliance with standards to a licensed surveyor	
Option 2: Eliminate tree survey requirement in lieu of a landscaping plan that does not have to be prepared by a licensed surveyor	Less costly and opens up more parties to provide plans other than just surveyors (e.g. landscapers)	Property owners may be less educated on overall site conditions & potential impacts on future development	

Issue No. 5: Trees removed in Violation (Section 9.5.1.7) **Concerns Raised:** Penalty may be too punitive when goal is compliance **Staff Recommendation**: Option 2			
Option	**Pros**	**Cons**	**Indicate Preferred Option with an "X'**
Option 1: Use <u>original</u> proposed language: "When trees of 8 inches DBH or greater have been removed in violation of this Ordinance, replacement trees shall be planted in the same general area according to a replacement schedule approved by the Village Planner in a ratio not to exceed 2:1 of two inches of caliper per inch removed. As an example, if six 8" trees are removed, 96 inches of caliper shall be planted. No tree planted shall be smaller than 3" caliper. The size of the tree removed shall be determined from the size of the remaining base or stump or an existing tree survey on file for the property. If the size of the tree cannot be determined but its removal can be documented by photographic evidence or the use of aerials, then the violator shall replant three 3" trees for every tree removed."	Disincentive to remove trees without a permit or verifying with staff regarding tree removal	More costly and could be viewed as being too "harsh"	
Option 2: Use <u>modified & simplified</u> proposed language: "Replacement trees shall be planted according to Section/Table 9.5.1.4"	No real penalty other than having to comply could require planting and costs	Not much of a "penalty" for illegal removal	

AN ORDINANCE AMENDING THE VILLAGE OF PINEHURST DEVELOPMENT ORDINANCE

Whereas development impacts adjoining uses and properties and can be impacted by adjoining uses and properties through an absence or elimination of vegetative buffering; and

Whereas development can be impacted by the impacts from activities that occur in adjacent rights-of-way including traffic, noise, dust, and odor through and absence or elimination of vegetative buffering; and

Whereas development impacts the overall visual character of the Village and the ETJ through the elimination or absence of vegetative buffering: and

Whereas these regulations will help to mitigate the aforementioned development impacts through creation of vegetated tree lined buffer yards; and

Whereas these regulations also contain provisions to incentivize the use of existing qualifying vegetation to provide buffering; and

Whereas these regulations are consistent with Guiding Principle 1 of the 2019 Comprehensive Plan to retain the small-town charm, scale, and character of the community to ensure a high quality life; and

Whereas these regulations are consistent with Guiding Principle 3 of the 2019 Comprehensive Plan to protect and enhance the quality and character of existing residential neighborhoods; and

Whereas these regulations are consistent with Guiding Principle 7 of the 2019 Comprehensive Plan to preserve, conserve, and feature Pinehurst's natural resources; and

Whereas the 2019 Comprehensive Plan was adopted by the Pinehurst Village Council on October 22, 2019 after undergoing a planning process supported by extensive and robust public participation that included residents, business owners, local interest groups, and elected and appointed officials; and

Whereas the 2019 Comprehensive Plan is the result of thoughtful public conversations spanning over one year and represents a path forward for the Village of Pinehurst to achieve its vision.

Now, be it ordained by the Village of Pinehurst Village Council that:

The following amendments to the Pinehurst Development Ordinance shall be made.

Section 1. The Village of Pinehurst Development Ordinance Chapter 9 Section 9.5 *Landscaping Requirements*, Section 9.14.6 *Tree Conservation and Newly Installed Trees and Plants* is amended to include the following.

Section 9.5 Landscaping and Buffering Requirements

Part 1. General Standards

9.5.1. Purpose and Scope

The regulations of this Section are intended to create buffer yards associated with development of parcels within the Village of Pinehurst and its ETJ. Buffer yards help to moderate visual contact, create spatial separation, and minimize adverse impacts on adjacent properties resulting from development activity. Buffer yards also help to reduce the visual effects and the impacts of traffic, noise, dust, and odor as well as to protect the privacy of neighbors. The Village values its existing tree canopy and these regulations provide incentives that allow existing qualifying trees to be used as part of the buffer required by this Section. By doing so, these regulations will preserve and enhance the visual character of Village and the ETJ and lessen the impacts of the development.

9.5.1.1 Definitions.

(A) **Clearing and Grading**: any use of the land by any person in residential, industrial, educational, institutional, or commercial development, highway and road construction and maintenance that results in a change in the natural cover or topography.

(B) **Development**: Unless the context clearly indicates otherwise, the term means any of the following:
   a. The construction, erection, alteration, enlargement, renovation, substantial repair, movement to another site, or demolition of any structure.
   b. The excavation, grading, filling, clearing, or alteration of land.
   c. The subdivision of land as defined in N.C.G.S. 160D-802.
   d. The initiation or substantial change in the use of land or the intensity of use of land.

(C) **Protected Trees:** Any healthy living tree with a diameter breast height of eight inches or greater.

(D) **Redevelopment:** For the purpose of this section, redevelopment is the physical change to a parcel of land that results in the increase of the floor area of the principal building by 50% or more.

(E) **Specimen tree** is any healthy living tree that:
   a. Has a trunk diameter at breast height (DBH) of twenty-four (24) inches or more;
   b. A trunk DBH of twelve (12) inches or more in the case of the following species:
      i. Ilex species (holly);
      ii. Magnolia species;

iii. Longleaf Pine species;

c. Is listed as a State or National Champion by the North Carolina Forest Service or the American Forestry Association;

d. Provides unique habitat for any endangered or threatened wildlife species protected by Federal law; or

e. Has been cited by the Village Council as being historically significant.

(F) **Buffer Yards**: for the purposes of Sections 9.5 and 9.14.6, buffer yards are defined as follows. Yard lengths are based on the most interior length of the setback line.

a. Front: the front buffer yard is equal to the depth of the front yard setback of the zoning district extended to the side property lines.

b. Rear: the rear buffer yard is equal to the depth of the rear yard setback of the zoning district extended to the side property lines.

c. Side: the side buffer yard is equal to the width of the side yard setback from where it intersects both the front and the rear yard.

d. Side Street: the side street buffer yard is equal to the width of the side street setback from where it intersects both the front and the rear yard.

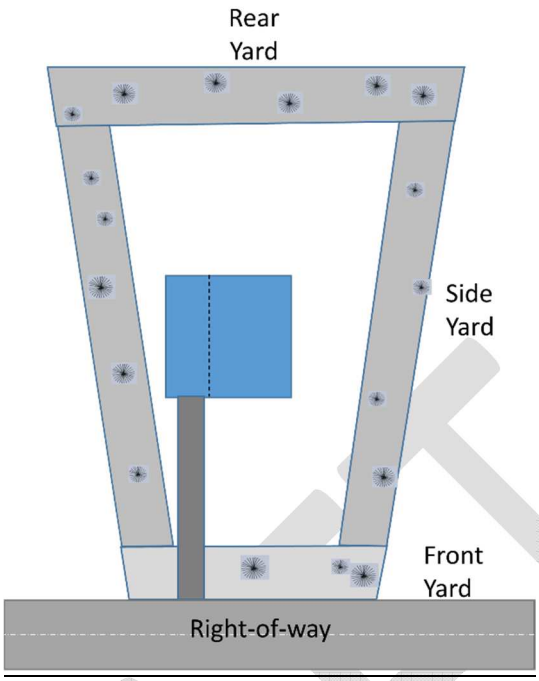

Figure 1. Standard lot yards

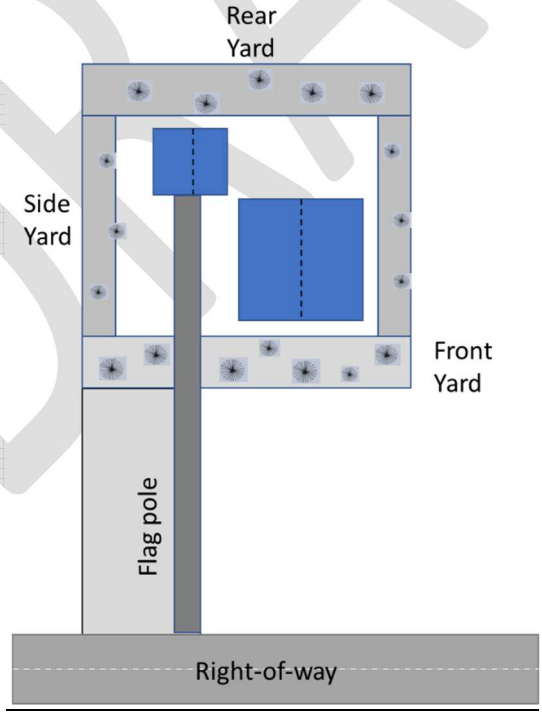

Figure 2. Flag Lot Yards

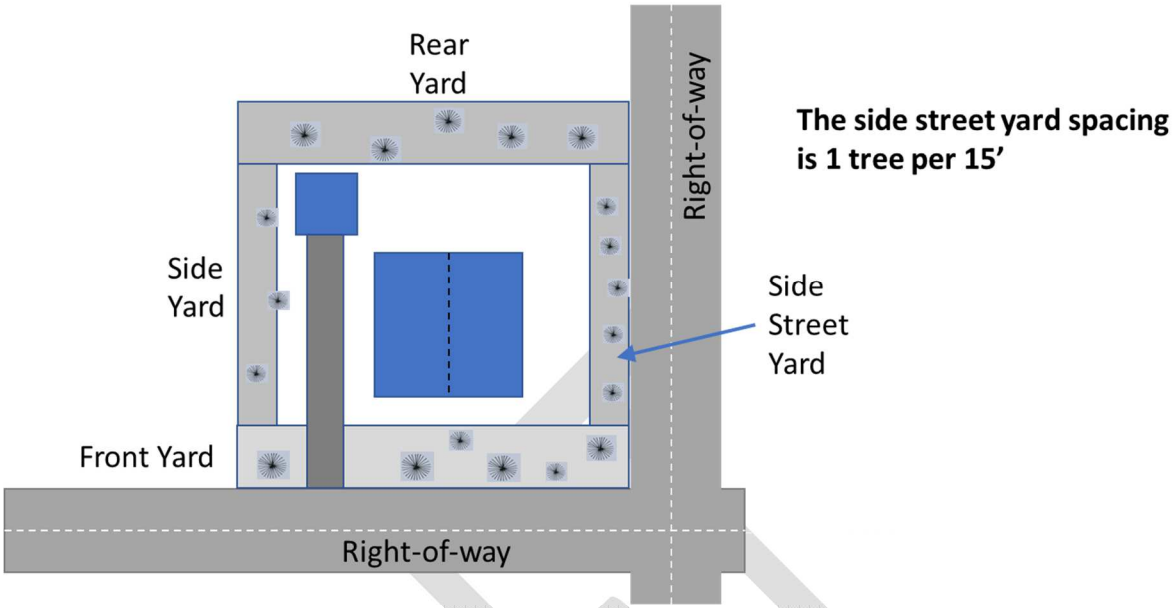

Figure 3. Side Street Buffer Yard

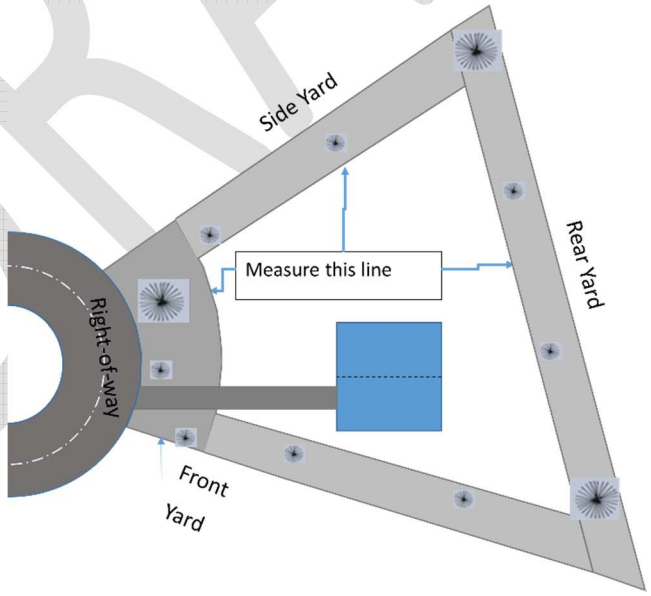

Figure 4. Where to Take Linear Measurements

(G) **Tree Removal:** "Tree removal" shall include, but not be limited to, trees removed by clearing, damage inflicted to the root system by machinery; girdling; storage of materials and soil compaction; changing the natural grade above or below the root system or around the trunk; damage inflicted on the tree permitting fungus infection or pest infestation; paving with concrete, asphalt or other impervious material within the drip line or such proximity as to be harmful to the tree; or any act of malicious damage to a tree.

9.5.1.2 Clearing and Grading Applications and Permits

(A) When clearing and grading activity is proposed on a vacant parcel and there is no active application for a development permit pursuant to this Ordinance (e.g. Major or Minor Site Plan, Major or Minor Subdivision, Single Family Development), a clearing and grading application must be submitted and a permit issued per the requirements of this Section.

If there is no tree survey on file for the property, then a tree survey must be prepared before any tree removal occurs unless it is subject to the exemptions listed in Section 9.5.1.6. If a landscape plan or tree survey has been prepared that is no older than five (5) years and is on file with the Village, it may be used whenever tree removal/replacement is planned.

(B) In addition to ensuring that Village standards are met, Village staff may use clearing and grading applications as an educational tool to provide helpful insight to the developer regarding the costs of removing and replanting trees that will be required for buffering uses as well as to provide protection to specimen trees.

9.5.1.3 Tree Survey

(A) Each application for a development or clearing and grading permit shall be accompanied by a tree survey. If a clearing and grading application accompanies an application for any other development permit, the tree survey shall be of the same scale as, and superimposed on, a development site plan or preliminary plat.

(B) Trees to be surveyed include all trees greater than or equal to 8″ DBH. Identification of trees smaller than 8″ DBH is encouraged if the applicant determines that trees smaller than 8″ DBH but larger than 3″ DBH may be needed for credit. All tree surveys shall include location, number, size (DBH), qualifying trunks and species with a scaled graphic representation of each protected tree, and the trunk location shall be provided. All required tree surveys shall include the name, phone number, address, signature, and seal of a licensed surveyor, landscape architect, or civil engineer registered in the State of North Carolina. The survey shall include all trees to be protected or preserved, and those scheduled to be removed, including dead and damaged trees. Construction access shall be shown on the survey. In cases where a previously approved recorded plat is utilized for the purpose of tree survey, the name, address, phone number, signature and seal of the licensed landscape architect, civil engineer, or surveyor registered in the State of North Carolina shall be provided. A scaled infrared or

high resolution black and white aerial photograph or print of equal quality may be substituted in cases where the Village Planner determines that it would provide sufficient information from which a decision may be made. This is typically the case when large contiguous areas of preservation are proposed, and the trees will not need to be counted towards credit.

(C) Existing Lots. Existing lots are lots created by final plat prior to the effective date of this Section.

(1) If an existing lot is undeveloped as of the effective date of this section, a tree survey shall be prepared prior to clearing or development.

(2) If an existing lot is developed for single-family residential purposes and is proposed for redevelopment, additions, or modifications, a landscape plan shall be submitted consistent with the requirements of Appendix B. A tree survey is not required.

(3) If an existing lot is developed for nonresidential purposes and is proposed for redevelopment, additions, or modifications, submittal requirements shall comply with Section 9.5, Part 2 and a tree survey is not required.

(4) In the event an existing lot is damaged or destroyed due to disasters such as windstorms, ice storms, fire, or hurricanes, the requirements of this section shall not apply.

9.5.1.4 Buffer Yard Standards

(A) When a clearing and grading application is required and additional changes to the land are not proposed through a Major or Minor Site Plan or Major or Minor Subdivision, a minimum perimeter buffer must be planted or preserved per Table 9.5.1.4

Table 9.5.1.4

Location	Number of Required Trees
Front Buffer Yard	1 Protected Tree Per 15 Linear Feet of Street Frontage
Side Street Buffer Yard	1 Protected Tree Per 15 Linear Feet of Street Frontage
Side Buffer Yard	1 Protected Tree Per 35 Linear Feet
Rear Buffer Yard	1 Protected Tree Per 25 Linear Feet

*If a lot is a flag lot or an irregularly shaped lot, the linear feet of street frontage is based on the widest street facing dimension of the front yard.

The number of required trees shall be measured in whole numbers. The applicant shall round down when calculating the number of trees.

Planted Tree Minimum Size

Tree type	Minimum Planting Height	Minimum Caliper
Evergreen trees	6 feet	2 inch
Tall trees from Appendix F	8 feet	2 inch
Short trees from Appendix F	6 feet	1.25 inch

(B) Driveway Allowance

Each parcel shall be given an allowance for one 20' driveway. This shall be applied by subtracting twenty (20) feet from the linear foot calculation for number of required trees as shown in Table 9.5.1.4.

Example

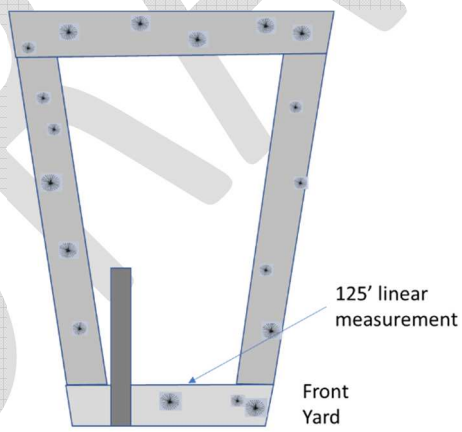

125' – 20' = 105'

105/15 = 7 trees

(C) Existing Tree Preservation Credits.

To help maintain the existing overall tree canopy and to encourage preservation of existing trees, credits may be given towards the requirements of Table 9.5.1.4 for existing preserved protected trees in the buffer yards as follows.

(1) Tree credits shall apply to the particular buffer yard in which the tree is located.
(2) One additional tree credit will be granted for every four (4) inch increase in tree girth above 12" DBH.

Example. The front tree preservation yard contains a 24" oak. Preservation of this tree grants credits in the front yard for four (4) trees.

Trees subject to the preservation credit may be grouped and are not required to meet spacing requirements in the side and rear yards. In order to ensure adequate street yard buffer and to maintain street tree canopy, trees may be grouped in the front yard; however, there shall be no space less than one tree per every 35 linear feet.

(D) Credit for Trees Less than 8" DBH

Credit may be provided for trees smaller than 8 inches DBH but no less than 3 inches DBH when there are insufficient trees present on the property to meet the requirements of Table 9.5.1.4.

(E) Minor Modifications for Alternate Spacing and Grouping

The Village Planner may authorize a minor modification to encourage the preservation of existing trees in lieu of planting subject to the following.

(1) To satisfy tree preservation credits described in 9.5.1.4 (C).
(2) To allow the preservation of trees within the building envelope if they are within a distance no greater than the required buffer yard depth when insufficient trees are available for preservation.

9.5.1.5 Buffer Yard Standards for Developed Lots

(A) Single-family lots undergoing redevelopment shall comply with Section 9.5.1.4(A).
(B) Single-family lots undergoing development that is less than 50% of the floor area of the principal structure shall comply with the landscape table below.

Zoning District	# of Trees per Dwelling	Size of Tree
R-5, R-8 and R-10	4	3" DBH
R-15, R-20, R-30	8	3" DBH
R-210	16	3" DBH

(C) All other lots shall comply with 9.5 Part 2.

9.5.1.6 Exemptions

(A) This Article shall not restrict public utilities and electric suppliers from maintaining safe clearance around existing utility lines, and existing easements in accordance with applicable state laws.

(B) Removal of dead or naturally fallen or severely damaged trees or vegetation, or the removal, by an approved method, or trees or vegetation that are a threat to the public health, safety, or welfare based on observation by the Village Planner or by the submittal of an arborist's report.

(C) Removal of trees for the purpose of conducting bona fide agricultural and forestry operations shall be exempt from the provisions of this Article. This exemption applies to forestry activity on forestland that is taxed on the basis of its present-use value as forestland under Article 12 of Chapter 105 of the North Carolina General Statutes (NCGS) and activities conducted in accordance with an approved forestry management plan subject Chapter 89B of NCGS and extends to any activity defined as a bona fide farm operation in NCGS 160D-903 within the extraterritorial jurisdiction of the Village. If an exempt timber harvest occurs as described above, the Village may withhold approval of a building permit, site plan, or subdivision plat for the site for three (3) years following the harvest and up to five (5) years if the removal is deemed willful.

(D) Properties located in the VC, PC, and VMU Zoning Districts are exempt.

(E) The North Carolina Department of Transportation (NCDOT) shall be exempt from the tree protection and preservation requirements of this Ordinance within NCDOT rights-of-way. Tree removal in the Village rights-of-way must be approved by the Village Manager or designee.

(F) All real properties owned by the Village of Pinehurst are exempt if tree removal is authorized by the Village Manager or designee.

9.5.1.7 Trees Removed In Violation

(A) Protected Trees Removed in Violation**.** When trees of 8 inches DBH or greater have been removed in violation of this Ordinance, replacement trees shall be planted in the same general area according to a replacement schedule approved by the Village Planner in a ratio not to exceed 2:1 of two inches of caliper per inch removed. As an example, if six 8" trees are removed, 96 inches of caliper shall be planted. No tree planted shall be smaller than 3" caliper. The size of the tree removed shall be determined from the size of the remaining base or stump or an existing tree survey on file for the property. If the size of the tree cannot be determined but its removal can be documented by photographic evidence or the use of aerials, then the violator shall replant three 3" trees for every tree removed.

Alternate Language:

Replacement trees shall be planted according to Section/Table 9.5.1.4

Tree preservation standards are incorporated in 9.5 Part 2 Landscape Requirements for Multi-family, Commercial and Industrial projects and in 9.14.6 for Single Family Residential Use.

Section 2. Amend Section 9.5 to insert a new part and renumber the existing text.

Part 2.

~~Section 9.5~~ Landscaping Requirements for All Development Requiring a Permit Other than Single-Family Residential and Clearing and Grading

~~9.5.1. Purpose and Scope~~

~~The natural landscape conditions within the Village of Pinehurst and its extraterritorial jurisdiction typifies the North Carolina Sandhills and Longleaf Pine Ecosystems. These natural conditions (topography, vegetation, and wildlife) are unique within North Carolina and are the strongest visual aspects defining the character of the Village. The purpose of the landscaping standards in this Section shall be to create an appearance in which manmade development is situated within a forest or naturalized setting in all zoning districts. All size standards in this section shall conform to the American Standards for Nursery Stock.~~

9.5.~~1~~2.1 Landscape Plan Required

A landscape plan shall be submitted to the Village Planner and its approval is a prerequisite for the issuance of a development permit where required.

9.5.~~1~~2.2 Planted Buffers

(A) Permitted Uses Within Planted Buffer Areas: Planted Buffers should be left in an undisturbed natural vegetative state and provided with supplemental plantings. Selective thinning of vegetation and removal of dead vegetation may be permitted as long as the intent of the planted buffer requirement is maintained. Driveways and utilities may cross a planted buffer at or as near a perpendicular angle as practical. Paths and walkways may pass through the planted buffer and pedestrian walkways (greenways) may be installed within the buffer area. Grading in the designated planted buffer may be allowed with site plan approval, if the re-vegetation plan is determined to meet the intent of this Section;

(B) Location of Planted Buffers: Required planted buffers shall be provided along the perimeter of development unless alternate locations are approved. Planted buffers shall be designated and dimensioned on all site plans and subdivisions plans, where applicable;

(C) Public Pedestrian Easement Required: The full width of all buffer areas shall be designated as a public pedestrian easement and shown on a recorded plat;

(D) Application:

(1) These standards apply to all non-residential and multi-family uses (including townhouse unit development) located within the Village of Pinehurst and its extraterritorial jurisdiction except for properties containing only museums and/or libraries as the primary use and located within the PC zoning district. Additionally, the Village Council may waive some or all of these standards for developments and uses located within the VC, VMU, VCP and VR Zoning Districts when determined to be in the best interest of the public. In waiving these standards, the Village Council may require an alternate means of buffering if agreed upon by the property owner. When nonresidential and multi-family uses submit a site plan for locations next to property zoned for primarily residential use, planted buffers shall be provided near the perimeter of the nonresidential or multi-family property. One half of the planted buffers requirements shall apply

when a public street or railroad right-of-way separates a nonresidential or multi-family uses from a residential property. If a greenway passes through a landscape buffer the area of the greenway shall be subtracted from the total buffer area for plant count purposes.

(2) The required planted buffer width is based on the classification shown on Table 9.5.2.2;

(3) If said project is adjacent to property that is zoned non-residential or multi-family but is used for single family purposes, half the required planted buffer width along the perimeter of the property adjoining that property shall be required;

(4) A class 3 planted buffer shall be installed along and adjacent to NC 2, Midland Road east of the Traffic Circle to the zoning jurisdictional boundary of Pinehurst, on the west side of Hwy. 15/501 from the northern extent of the zoning jurisdictional boundary of Pinehurst southward to the western extent of the traffic circle and the intersection with Hwy. 211, Hwy. 211 from the intersection of Mckenzie Rd. to the western extent of the zoning jurisdictional boundary of Pinehurst, Murdocksville Rd. from the intersection of Hwy. 211 to the northern extent of the zoning jurisdictional boundary of Pinehurst and on the west side of Hwy 5 from the intersection of Lake Hills Rd. south to the intersection with Trotter Hills for all non-single family residential uses.

(5) If the adjacent property is zoned for residential use but is vacant at the time of the proposed development, the full required planted buffer width shall be provided;

(6) If the proposed development is non-residential and the adjacent property is zoned or used for multi-family dwellings, one-half of the planted buffer width shall be provided, but not less than ten (10) feet;

(7) If the proposed development is for multi-family dwellings adjacent to property zoned or used for multi-family dwellings, one-half of the planted buffer width shall be provided, whether the property is occupied or not.

(E) Planted Buffer Classifications and Width:

(1) Planted buffer width is based on uses in the following classifications:

(a) Class 1 - 10 feet: Cemeteries, golf courses, passive recreational areas, and;

(b) Class 2 - 20 feet: Offices, churches, schools, public facilities including playgrounds, ball fields, community swimming pools, and similar facilities, day care facilities, multi-family, residential, hotels;

(c) Class 3 - 30 feet: Neighborhood commercial and service activities including, but not limited to, retail operations, funeral homes, restaurants, banks, convenience stores;

(d) Class 4 - 50 feet: Commercial activities with higher vehicle activities including, but not limited to, vehicle repair, theatres, outdoor recreation centers, and outdoor storage

Table 9.5.~~1~~2.2

REQUIRED PLANTED BUFFER WIDTH IN FEET BASED ON BUFFER CLASSIFICATION AND ADJACENT PROPERTY USE AND ZONE				
ADJACENT PROPERTY USE AND ZONE				
Planted Buffer Class	Developed Residential Zone	Principal Residential Use in Nonresidential Zone	Developed Multi-Family Zone	Vacant Multi-Family Zone
Class 1	10 feet	10 feet	10 feet	10 feet
Class 2	20 feet	20 feet	10 feet	10 feet

Class 3	30 feet	30 feet	15 feet	15 feet
Class 4	50 feet	50 feet	25 feet	25 feet

(2) The required setbacks may be used to meet landscape planted buffer width requirements in all districts. When planted buffers are required for residential uses, the planted buffer requirements shall be designated open space, or common area;

(3) Planted buffer widths and required plantings may be reduced by thirty percent (30%) if the site plan indicates berming, alternate landscaping, walls, opaque fencing in combination with landscaping or topographic features which will, in the opinion of the Village Planner, achieve the intent of this Section as outlined in Section 9.5.1 and result in equal or better performance. In no case shall a buffer width be less than ten (10) feet. Berms may not have a slope steeper than two (2) horizontal to one (1) vertical and must have a crown width of at least two (2) feet and a minimum height of two (2) feet;

(F) Requirements for Planted Buffer Areas:

(1) Existing Vegetation. Existing vegetation, regardless of species, shall be used to meet all or part of the requirements of this Section wherever possible, if it provides the same level of obscurity as the planted buffer required below. Vegetation to be saved shall be identified on site plans, along with protection measures to be used during grading and construction. (See Section 9.5.2.7 for protection measures and calculation of credits for existing trees);

(2) Planting requirements: Planting requirements for planted buffers include both trees (large and small) and shrubs as described below. (See Appendix F for a listing of native/water conserving trees and shrubs.) In calculating buffer planting requirements, areas of driveways are excluded;

(a) Tree Standards: This requirement may be satisfied as follows:

1. One longleaf pine tree with a minimum size of three (3) inch caliper at planting are required per two hundred (200) square feet of buffer area.

2. Two Understory trees a minimum of two-inch caliper are required per five hundred (500) square feet of buffer area, one of which is to be an evergreen species that is not a pine tree.

3. Trees shall be distributed along the entire length and width of the planted buffer. Due to unique characteristics of a site, or design objectives, alternative plant mixes and spacing may be approved by the Village Planner.

(b) Shrub Standards: Shrubs, a minimum of twenty-four (24) inches in height, of a variety that can be expected to reach four (4) to five (5) feet in height and three (3) feet in width within three (3) years of planting, shall be provided. Shrubs shall not be planted closer than six (6) feet to newly planted trees, nor within the drip line of existing hardwood trees. Shrubs shall be distributed along the entire length and width of the planted buffer, preferably in naturalistic groupings so as not to create a hedge-like condition. Shrubs shall be provided at one per seventy-five (75) square feet of buffer area.

9.5.~~1~~2.3 Landscape Screens

(A) The purpose of a screen is to use plants and/or other landscape or architectural elements to obscure views from all corridors or adjacent properties.

Structures such as loading docks, mini-warehouses, service courts, dumpster areas, mechanical equipment, and outside storage of material stocks or equipment, either for sale or not for sale on the premises, such as, but not limited to, motor vehicles, equipment, or

construction equipment shall be screened from unobstructed off-site views. Uses requiring screening as noted in this Ordinance shall be screened according to the requirements of this Section. This screening requirement does not pertain to outdoor display of merchandise located within the Historic Preservation Overlay District that complies with the regulations and design guidelines of that district.

(1) Landscape Screen Standards: Features and uses specified above and/or others requiring screens shall provide a visual obstruction from all corridor and adjacent properties in conformance with the following standards: The screen may be composed of view-obscuring vegetation, wall, fence, or berm. The items may be used individually or in combination. The minimum result shall be a semi- opaque seventy-five percent (75%) screen that obscures views from the ground to a height of the object being screened. Evergreen screening plants shall be at least five (5) feet tall at the time of installation and reach the desired height within three (3) years of planting. Additionally, screen areas shall be sufficient size to allow for the mature growth of plant materials when used.

9.5.~~1~~2.4 Parking Area Landscaping

(A) Purpose: In order to reduce reflected sunlight and headlight glare from parked vehicles, as well as to maintain a separation between vehicles and other uses and to reduce the effects on the environment of vehicle parking facilities, the following standards apply;

(B) Required Perimeter Landscape Plants:

(1) Large trees (unless subject to overhead power lines): Longleaf pines shall be planted at the rate of one three (3) inch caliper tree per twenty (20) linear feet of property line abutting a street and/or adjoining property, less driveways and sight distance triangles. Trees must be a minimum of five (5) feet and a maximum of twenty (20) feet from the parking lot edge to meet this requirement.

Credit given for existing, healthy, protected trees, regardless of species, shall be according to 9.5.~~1~~2.7 of this Section;

(2) Evergreen shrubs at the rate of one (1) 24-inch height minimum shrub per three (3) linear feet of parking lot edge abutting streets and adjoining property, less driveways, of a species expected to reach a minimum height of 36 inches and a minimum spread of thirty (30) inches within three (3) years of planting. This rate may be varied based upon size of installed plant materials. Shrubs must be a minimum of five (5) feet and a maximum of ten (10) feet from the parking lot edge to meet this requirement.

Shrubs shall be planted such that no less than seventy-five percent (75%) of the length of the parking lot edge, to a height of thirty-six (36) inches, is obscured from view after three (3) years of growth. Shrubs planted within sight distance triangles shall be of a type with a maximum mature height of eighteen (18) inches.

Additionally, shrubs shall not be planted within six (6) feet of the trunk of a tree;

(3) A brick or stone wall, or fence, at least thirty-six (36) inches tall and of a material compatible with the building, may be substituted for the requirements of shrubs.

(4) Berms may be installed within the highway (front) or interior (side or rear) yards with a minimum two (2) foot height, two (2) foot minimum crown width, and side slopes of not steeper than two horizontal to one vertical. Berms shall be planted with live vegetation, and may be used with smaller plants to meet the required screening area, provided that the combination of the berm and the shrubs obscures no less than seventy-five percent (75%) of the length of the parking area, to a minimum height of thirty-six (36) inches after three (3) years of growth;

(5) Areas used for vehicle sales and/or service, parking, and business transactions such as areas adjacent to gasoline pumps (even if under a canopy) and areas for drive-up service, shall be considered parking areas and shall comply with the requirements of this Section.

(C) Landscaping Within Parking Areas:

(1) Location: Parking areas shall provide and maintain landscaped areas based upon the parking area. Areas under canopies, loading and service areas, and portions of drives with no parking on either side for a distance longer than twenty-five (25) feet and/or used exclusively as access to loading or service areas, are exempt from this requirement. The landscaping within parking areas shall be provided in addition to planted buffer requirements of this Ordinance.

Areas used for landscaping shall be provided in the amount equivalent to at least ten (10) percent of the parking area, and shall be used for planting either trees and/or shrubs according to the requirements below. Tree planting areas shall be located such that no parking space is farther than seventy-five (75) feet from a tree trunk.

(2) Required Landscape Plants: Trees shall be used at the following rates, either in combinations of small and large trees, or with large trees only, to add up to the required landscape area:

(a) One three (3) inch caliper, large hardwood or pine tree per two hundred fifty (250) square feet of required landscaped area. Each large tree shall be located within a minimum growing area of two hundred fifty (250) square feet un-encroached upon by shrubs or impervious pavement, with a minimum dimension of ten (10) feet;

(b) One understory tree less than three (3) inch caliper at the rate of one eight (8) foot tall tree per one hundred twenty-five (125) square feet of required landscaped area. Understory and evergreen trees shall be located within a minimum growing area of one hundred twenty-five (125) square feet, with a minimum dimension of seven and one half (7½) feet, un-encroached upon by shrubs or impervious pavement. Understory trees may be used to fulfill up to one third (1/3) of the required trees.

(3) Islands and Medians:

(a) Minimum curb radii of five (5) feet are required on the corners of all tree islands and medians to allow for free movement of motor vehicles around planting materials. (See the Village of Pinehurst Engineering Standards and Specifications Manual). All islands shall have raised curbing around them meeting the Village of Pinehurst Engineering Standards and Specifications Manual to further protect plants from being run over by motor vehicles. Medians without curbing shall include devices to stop vehicles from driving into the planted areas;

(b) No more than one tree may be provided per island, unless there is at least the minimum growing area per tree as required above. Large trees shall not normally be planted less than eighteen (18) feet apart, and small trees/large shrubs shall not normally be planted less than twelve (12) feet apart.

(4) Existing Trees:

(a) Credit given for existing, healthy, protected trees shall be according to 9.5.~~1~~2.7 of this Section. Trees used to meet other requirements of this Ordinance may not be used to meet the requirements of this Section.

(5) Sight Distances: Trees and shrubs shall be either pruned or located to facilitate safe sight distances within parking lots.

(D) Parking Area Landscaped Yards: Any new or expanded off-street parking areas shall provide landscaped areas meeting the requirements below:

(1) New or expanded parking areas shall provide a landscaped area, adjacent to and outside of the street right-of-way, and/or adjacent residential property line edge, less driveways, of a minimum of ten (10) feet in width and adjacent non-residential property line edge, less driveways, of a minimum of five (5) feet. Proposed locations of plants and parking spaces shall be arranged to protect plants from vehicles;

(2) Planted buffers and/or screens provided adjacent to right-of-way, as required under Sections 9.5.~~1~~2.2 and/or 9.5.~~1~~2.3 of this Section, and located between parking lots and streets and/or adjoining residential property may be considered in fulfilling these requirements.

(E) Street Trees Required

(1) For all non single-family developments one three (3) inch caliper, large hardwood or pine tree per forty (40) lineal feet of street frontage minus driveways shall be planted in the road right of way. These street trees shall be approved by the Village Engineer as being acceptable street trees. These trees shall be planted outside of site triangles and not conflict with any utilities. Alternate type and size trees may be approved by the village engineer based on existing site conditions and constraints.

9.5.~~1~~2.5 Maintenance Responsibility

Unless otherwise stated, the owner of any property where landscaping is required shall be responsible for the maintenance of all required plant material and continued compliance with this Section.

9.5.~~1~~2.6 Request for Extension of Compliance

(A) A letter of request for extension of compliance with landscaping requirements may be filed with the Village Planner that states the reasons why the request is being made. If the Village Planner finds that there are unfavorable conditions for planting, an extension of compliance with landscaping requirements may be allowed for a period not longer than ninety (90) days. The letter shall also acknowledge that the property owner is aware of all landscaping and screening requirements, and will comply with those requirements within ninety (90) days, or discontinue use of the property;

(B) If an extension is allowed by the Village Planner, the applicant shall provide to the village a financial guarantee as set forth in Section 9.17.1.26 sufficient to cover one hundred twenty-five percent (125%) of the installed landscaping costs;

(C) If the initial letter of request for extension of compliance with landscaping requirements has expired and conditions are still deemed unsuitable for planting, the applicant may request one (1) additional extension of up to ninety (90) days. Failure to comply with the provisions of this Section within the time noted in the letter of request for the extension of compliance with landscaping requirements shall be deemed a violation of this Ordinance. In addition, failure to perform in accordance with this Section shall result in default and the forfeiture of the financial guarantee as set forth in Section 9.17.1.26.

9.5.~~1~~2.7 Existing Vegetation Credits

(A) Existing healthy trees and shrubs shall be retained when possible and may be credited toward landscape requirements. Vegetation to be saved shall be identified on submitted plans. Protection measures shall be installed to maintain tree health and such protective measures shall be shown on the submitted plan.

(B) Credit given for existing, healthy, protected trees shall be on a tree-for-tree basis, for planted buffer areas, and on the basis of fulfilling the requirements for parking areas. Existing trees will not be allowed to be counted towards landscape screen requirements. Trees so credited must be at least three (3) inch caliper.

9.5.~~1~~2.8 Specimen Trees

(A) Specimen trees include all of the following:

A specimen tree is any healthy living tree that:

(1) Has a trunk diameter at breast height (DBH) of twenty-four (24) inches or more;

(2) A trunk DBH of twelve (12) inches or more in the case of the following species:

(a) Ilex species (holly);

(b) Magnolia species;

(c) Longleaf Pine species;

(3) Is listed as a State or National Champion by the North Carolina Forest Service or the American Forestry Association;

(4) Provides unique habitat for any endangered or threatened wildlife species protected by Federal law; or

(5) Has been cited by the Village Council as being historically significant.

9.5.~~1~~2.9 Preservation and Removal on Private Property

(A) Specimen Trees On Private Land:

(1) Specimen trees shall be shown on all preliminary commercial and residential site plans submittals and located by survey on final site or Landscape Protection Plans. The Village Planner may visit the site to determine the accuracy of identification. The location and identification of specimen trees shall be required if such trees are within one hundred (100) feet of areas of a development site where soil disturbance or construction activity is proposed;

(2) Proposed development shall be designed to maximize the preservation of specimen trees. Where specimen trees exist, flexible approaches such as adjustments to lot layout, placement of buildings and paved surfaces and location of utilities shall be pursued in order to save them;

(3) Notwithstanding any provision of this Ordinance to the contrary, saving of a specimen tree shall constitute evidence that the requirements for a case have been met for a variance application;

(4) No soil disturbance from construction, trenching or grading, or paving, or storage of equipment or materials shall take place within the critical root zone of any specimen tree to be preserved unless during the review of the site and/or Landscape Protection Plan it is determined there is no reasonable way the property can be developed without such disturbance.

(B) Voluntary Protection Of Specimen Trees On Existing Residential Lots:

(1) Specimen trees which are located on individual lots with single homes shall be protected if voluntarily registered by the property owner;

(2) Registration of such trees shall render the owner of the lot the following privileges: If a permitted accessory structure or addition to a house is being planned, notwithstanding any provision of the Ordinance to the contrary, saving of a specimen tree may constitute evidence that requirements for a case have been met for a variance application.

9.5.~~1~~2.10 Undisturbed Buffers Along Streams, Wetlands, and Water Bodies

(A) Notwithstanding any other provisions of this Ordinance regarding buffers, landscaping or setbacks, all development, other than development of existing single family lots shall maintain a thirty (30) foot undisturbed buffer measured from the top of the bank along all streams that are shown as "blue lines" on the most recent versions of U.S. Geologic Survey 1:24,000 scale topographical maps; along the edge of identified wetlands as established by the North Carolina Department of Environmental Resources as defined by N.C.G.S. §143.212(6); and along the edge of the full pond of any water body that is fed by or connected to a "blue-line" stream, other setbacks such as wetland and watershed (Section 8.3.3) may also apply;

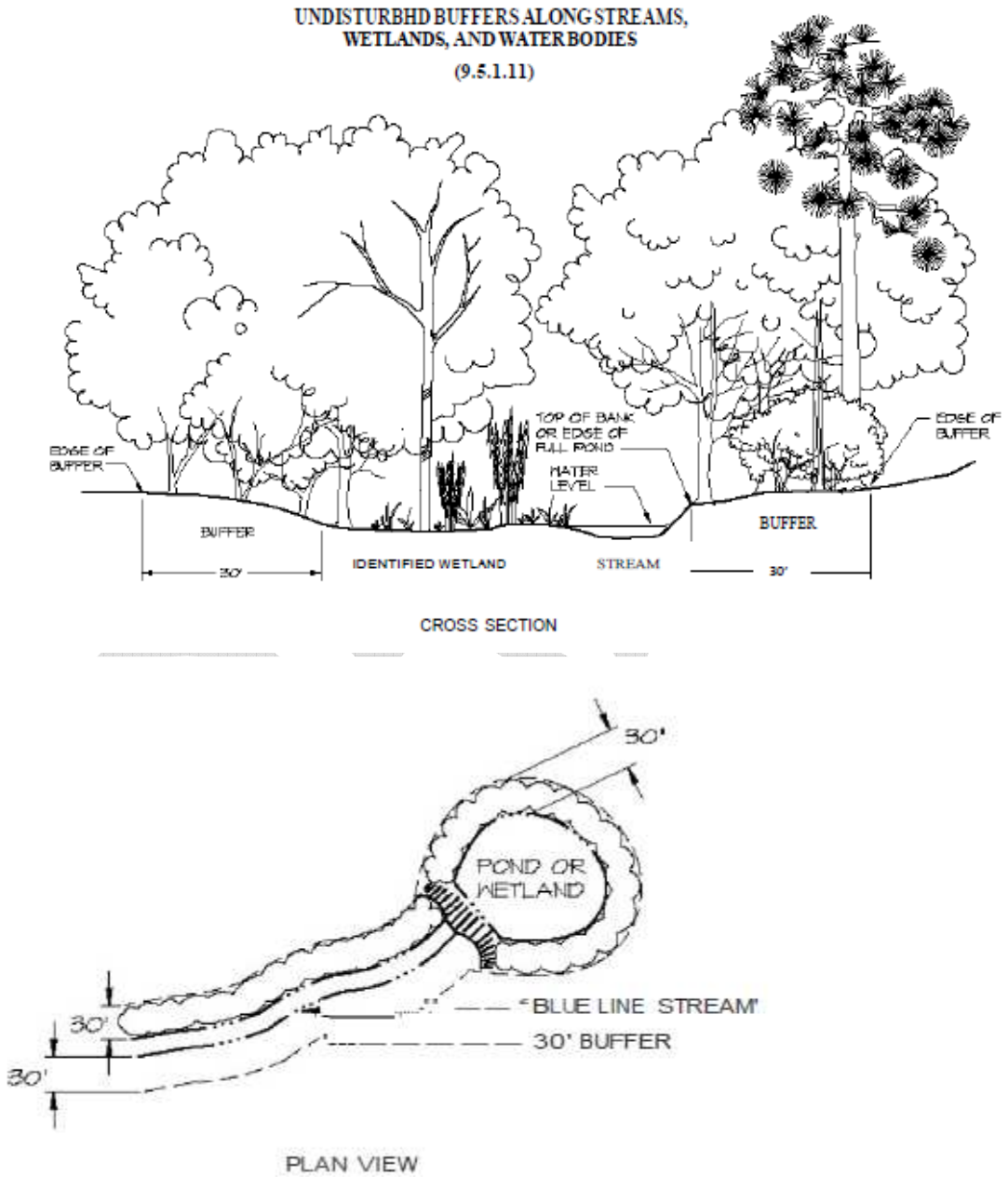

(B) The Village Council may permit as a special exception water dependent structures, pedestrian facilities and other similar structures where the Council finds that only minimal

disturbance will result. In permitting such facilities, the Council may attach such reasonable conditions as the Council deems appropriate.

Section 3. Amend Chapter 10 of the Pinehurst Development Ordinance to replace the definition of "development" and alphabetically insert the following additional definitions.

Clearing and Grading: any use of the land by any person in residential, industrial, educational, institutional, or commercial development, highway and road construction and maintenance that results in a change in the natural cover or topography.

Development: ~~Any man-made change to improved or unimproved real estate, including, but not limited to buildings or other structures, mining, dredging, filling, paving, excavation, or drilling operations, or storage of equipment.~~ Unless the context clearly indicates otherwise, the term means any of the following:

a. The construction, erection, alteration, enlargement, renovation, substantial repair, movement to another site, or demolition of any structure.
b. The excavation, grading, filling, clearing, or alteration of land.
c. The subdivision of land as defined in N.C.G.S. 160D-802.
d. The initiation or substantial change in the use of land or the intensity of use of land.

Protected Trees: Any tree with a diameter breast height of eight inches or greater.

Redevelopment: For the purpose of Section 9.5, redevelopment is the physical change to a parcel of land that results in the increase of the floor area of the principal building by 50% or more.

Specimen tree is any healthy living tree that:

a. Has a trunk diameter at breast height (DBH) of twenty-four (24) inches or more;
b. A trunk DBH of twelve (12) inches or more in the case of the following species:
    i. Ilex species (holly);
    ii. Magnolia species;
    iii. Longleaf Pine species;
c. Is listed as a State or National Champion by the North Carolina Forest Service or the American Forestry Association;
d. Provides unique habitat for any endangered or threatened wildlife species protected by Federal law; or
e. Has been cited by the Village Council as being historically significant.

Buffer Yards: for the purposes of Sections 9.5 and 9.14.6, buffer yards are defined as follows. Yard lengths are based on the most interior length of the setback line.

a. Front: the front buffer yard is equal to the depth of the front yard setback of the zoning district extended to the side property lines.
b. Rear: the rear buffer yard is equal to the depth of the rear yard setback of the zoning district extended to the side property lines.
c. Side: the side buffer yard is equal to the width of the side yard setback from where it intersects both the front and the rear yard.
d. Side Street: the side street buffer yard is equal to the width of the side street setback from where it intersects both the front and rear yard.

Section 4. The Village of Pinehurst Development Ordinance Chapter 9, Section 9.14.6 *Tree Conservation and Newly Installed Trees and Plants* is amended as follows.

General Intent. The regulations of this Section are intended to preserve trees along the outer perimeter of development sites such that buffer yards are retained/created to buffer uses from adjacent properties and to reduce visual effects and the impacts of traffic, noise, dust, and odor. Where buffer yards do not exist or have been previously cleared, the planting requirements of this section apply.

(A) All development, including clearing and grading activities, shall consider conservation of existing specimen and protected trees. Where such trees exist, flexible approaches such as adjustment to placement of buildings and paved surfaces and location of utilities may be permitted by the Village Planner to preserve them. The conservation of existing trees that do not conflict with the placement of buildings, drives, walks, patios, or other site amenities is encouraged. ~~Qualifying trees shall be healthy trees three 3) inches in diameter four and one-half (4 ½) feet above the ground or larger. A minimum of four (4) qualifying trees for a single family dwelling zoning districts R-5, R-8, R-10 sites, eight (8) qualifying trees for R-15, R-20 R-30 sites and sixteen (16) trees for R-210 sites shall be saved and protected during construction. If the site does not have enough qualifying trees to meet this standard then one (1) three inch (3") caliper tree shall be installed for each tree the site does not contain.~~ A tree survey shall be submitted with an application for development approval that identifies all protected, heritage and specimen trees in accordance with Section 9.5. Part 1.

(B) Buffer Yard Standards

(1) A minimum planted perimeter buffer must be planted or preserved per the requirements of Table 9.14.6 below which establishes the minimum number of trees per buffer yard within an individual lot or parcel. If a buffer yard does not contain enough qualifying trees per Table 9.14.6, then the required number of trees shall be installed per the requirements of 9.14.6 (C). Tree preservation credits may be provided per Section 9.14.6 (B) (2). Buffer Yards are as defined in Section 9.5.1.1 (F)

Table 9.14.6

Setback Location	Quantity	~~Spacing for Planted Trees~~
Front Buffer Yard	1 Protected Tree Per 15 Linear Feet of Street Frontage	~~7.5' on center~~
Side Street Buffer Yard	1 Protected Tree Per 15 Linear Feet of Street Frontage	~~7.5' on center~~

Side Buffer Yard	1 Protected Tree Per 35 Linear Feet	~~17.5' on center~~
Rear Buffer Yard	1 Protected Tree Per 25 Linear Feet	~~12.5' on center~~

*If a lot is a flag lot or an irregularly shaped lot, the linear feet of street frontage is based on the widest street facing dimension of the front yard.

(2) Tree Preservation Credits.

Tree preservation credits shall be in accordance with 9.5.1.4. (C) and (D).

(3) Driveway Credit.

Driveway credit shall be in accordance with Section 9.5.1.4 (B).

(C) Tree Placement and Planting.

(1) Planted trees shall be evenly spaced within required yards and may be staggered in alignment throughout the length of the required buffer yard based on the spacing in Table 9.14.6 unless otherwise provided in this ordinance.
(2) At least one-half of the planted trees shall be Longleaf Pines. The remaining trees shall be selected from Appendix F of the Pinehurst Development Ordinance. Tall trees shall be used in the front buffer yard; however, short trees may be used under power line easements. Tall or short trees may be used in the side and rear yards. Substitutions may be allowed by the Village Planner that will result in equal or better performance.
(3) Landscaping should be of sufficient size so that mature appearance will be achieved within five (5) years of installation of trees.

Planted Tree Minimum Size

Tree type	Minimum Planting Height	Minimum Caliper
Evergreen trees	6 feet	2 inch
Tall trees from Appendix F	8 feet	2 inch
Short trees from Appendix F	6 feet	1.25 inch

(4) The Village Planner may authorize a minor modification to encourage the preservation of existing trees in lieu of planting subject to the following.
   a. To satisfy tree preservation credits described in 9.5.1.4 (C).
   b. To allow the preservation of trees within the building envelope if they are within a distance no greater than the required buffer yard depth when insufficient trees are available for preservation.

c. Small trees as identified in Appendix C may be used to avoid conflicts with overhead infrastructure.

(D) Protected Trees Removed in Violation**.** When trees of 8 inches DBH or greater have been removed in violation of this Ordinance, replacement trees shall be planted in the same general area according to a replacement schedule approved by the Village Planner in a ratio not to exceed 2:1 of two inches of caliper per inch removed. As an example, if six 8" trees are removed, 96 inches of caliper shall be planted. No tree planted shall be smaller than 3" caliper. The size of the tree removed shall be determined from the size of the remaining base or stump or an existing tree survey on file for the property. If the size of the tree cannot be determined but its removal can be documented by photographic evidence or the use of aerial photography, then the violator shall replant three 3" caliper trees for every tree removed.

Alternate Language:

Replacement trees shall be planted according to Section/Table 9.14.6

(E) Unless otherwise stated, the owner of any property where landscaping is required shall be responsible for the continual maintenance of all required plant material and continued compliance with this Section. This requirement shall run with the property and shall be binding upon all future property owners.

~~(B)~~(F) As part of the required single-family site plan the approximate location, size and type of trees to be used to meet this standard shall be shown.

~~(C)~~(G) All trees used to meet the intent of this section shall be healthy and well protected during construction. See Appendix F for a listing of trees which are known to be adaptive and naturalized in the Sandhills of North Carolina. Any of these trees can be used in meeting the tree conservation standards of this section.

~~(D)~~(H) HVAC units, pool equipment, well houses, and other structures on the property shall be screened with landscaping material or fencing so as to be seventy-five percent (75%) opaque.

~~(E)~~(I) Foundation Plantings Required: Foundation plantings shall be provided for all principal and accessory buildings and structures, including storage sheds. The number of plants or plant groupings shall be provided based on the linear footage of foundation along the front and sides of ~~the~~ each structure minus doorways, and steps at a rate of one (1) shrub or plant grouping per six (6) linear foot of foundation. A minimum of fifty percent (50%) of the required plantings shall be five (5) gallon or larger at the time of planting, the remainder shall be a minimum of three (3) gallon in size. Said plantings are not required to be placed in a uniform, linear arrangement when installed and plant groupings or ground cover beds may be used to meet the intent of this section.

~~(F)~~(J) The site shall be designed to minimize the removal of mature specimen trees, for example, Longleaf Pine, Dogwood, American Holly and Southern Magnolia.

1895

VILLAGE OF

PINEHURST

PLANNING AND INSPECTIONS DEPARTMENT COUNCIL STAFF MEMO

To: Mayor Strickland and Village Council

From: Alex Cameron, Senior Planner
Kathy Liles, Senior Planner
Darryn Burich, Director of Planning and Inspections

Cc: Jeff Sanborn, Village Manager
Natalie Dean Hawkins, Assistant Village Manager
Kelly Chance, Village Clerk

Date: March 17, 2021

Subject: Proposed PDO Amendments to create buffer development standards in Sections 9.5 and 9.14.6 of the Pinehurst Development Ordinance.

This staff memo supplements the previous staff reports/memos included in the Council's March 9th agenda packet for the public hearing item of the same subject

During the public hearing and subsequent 24 hour public comment period following the March 9th public hearing, comments from members of the public as well from Council were given on the proposed amendments. Staff met with Council members, builders, and the Moore County Home Builders Association. These interactions have allowed for identification of code that remains unchanged except for formatting, minor modifications for clarification of the proposed text, and consolidation of issues of concern from Council. This memo intends to summarize and seek Council feedback on comments or issues of concern. Staff proposes minor modifications to the ordinance and seeks feedback from Council before making additional changes to the proposed text.

Staff Proposed Minor Modifications:

A. The column in Table 9.14.6 for spacing requirements created confusion for many. It is equivalent to the proposed language that allows for the 15' tree separation to be staggered.Staff recommends removing that column all together.

B. A table has been added to 9.5.1.4 to make it plain that property can be cleared and graded but trees must be replanted if removed. The table specifies the tree sizes to be planted to be consistent with the language in Section 9.14.6.

C. Potential conflicts with private deed restricted communities that have separate planting or preservation requirements was discussed at the previous meeting. The required buffer yards are based on the front, side street, side and rear setbacks in the zoning district. In the PDO, golf course/lakefront setbacks are different setbacks. Therefore, the rear or side buffer yard standard would not apply. Staff can provide language in the draft ordinance to make this clearer and alleviate any potential conflicts.

Items for Further Council Discussion and Consideration:

A. Tree Spacing/Grouping

Many comments were made concerning the required spacing and grouping.

- Adequate room for required plantings in the side yard and impacts with the building footprint and proper grading and drainage.
- Front yard vistas.
- Not allowing for flexibility in landscape design.

The draft ordinance allows for grouping if receiving credit for existing trees so long as there is no space less than one tree per 35 linear feet. Currently, no grouping or alternate spacing is allowed for newly planted trees. The intent of the spacing requirements was to maintain buffering as stated in the purpose and scope. Allowing for grouping of existing trees was another way to incentivize preservation.

Council could consider some of these options:

1. Allow for grouping and alternate spacing for newly planted trees.
2. Alter the 35 linear foot requirement to allow for increased spacing within the buffer yards.
3. Consider no spacing requirements for newly planted trees or trees preserved to meet the buffer yard requirements. The required number of trees would still need to be met within the applicable buffer yard.

B. One Tree Per 15 Linear Feet of Street Frontage Requirement/A Single 20' Driveway Credit

Staff recommended this number based on the language in the 2019 Comprehensive Plan which states "it is critically important to the character of Pinehurst that it maintain its tree-lined corriders and encourage the preservation of trees on both public and private property." Also, additional landscaping in those areas would better buffer from light and noise from the impacts of the street in line with the purpose and scope of the ordinance.

Comments received included:

- Too stringent
- Restricts second driveway

Council could consider the following options:

1. Leave unchanged.
2. Adjust the calculation for front and side street buffer yards.
3. Additionial driveway credit.

C. Half of The Required Plantings For Single-Family Development Be Longleaf Pines

Staff recommended this based on the 2019 Comprehensive Plan which states the Village should strive to enhance and protect the longleaf pine-wiregrass ecosystem.

Comments received included:

- Plant selection is a personal choice
- Loss rate

Council could consider the following options:

1. Leave unchanged.
2. Apply this standard to front and side street buffer yards only.
3. Allow any tree listed on Appendix F of the PDO.

D. Tree Survey

The requirement to provide a tree survey for all clearing and grading applications and other development applications was to document the location, size and type of existing trees. This topic opens up who can prepare a submittal to document compliance with the standards.

Comments received included:

- Too costly
- Constrains who can document compliance with the standards

Council could consider the following options:

1. Leave unchanged.
2. Could a landscape plan be sufficient or should a tree survey be required.

E. Trees Removed in Violation

At the March 9th meeting staff recommended revising the text to Section 9.5.1.7 Trees Removed in Violation to:

> 9.5.1.7 Trees Removed in Violation. Replacement trees shall be planted according to Section/Table 9.5.1.4.

Council could consider the following options:

1. Leave unchanged.
2. Agree with the staff recommendation.

Staff Recommendation

Staff recommends Village Council provide feedback on the above items so a revised draft ordinance can be brought for consideration.

John Hoffman
Tree Ordinance

I STRONGLY SUPPORT THIS EFFORT TO EXAMINE AND STRENGTHEN THE APPROPRIATE SECTIONS OF CHAPTERS 9 AND 10 OF THE PINEHURST DEVELOPMENT ORDINANCE TO ADDRESS TREE PRESERVATION, AND LANDSCAPING STANDARDS IN THE VILLAGE OF PINEHURST. IN MY OPINION, THE PREVIOUS ADMINISTRATION ALLOWED, AND IN SOME CASES SUPPORTED DUBIOUS PROJECTS ~ IE "THE BARRACKS", OR WALKER STATION (TO NAME A FEW) WHICH WERE INAPPROPRIATE — ALL IN SUPPORT OF SO CALLED PROGRESS.

THE VILLAGE STAFF MADE A STRONG PRESENTATION AT THE P & Z BOARD HEARING USING SLIDES TO SHOW EARLIER, ORIGINAL STREETSCAPES AROUND OLD TOWN AND THEN COMPARED THEM WITH NEW CONSTRUCTION ON MEDLIN ROAD WHICH DEMONSTRATED THE TOTAL LACK OF LANDSCAPING STANDARDS IN FORCE NOW.

UNFORTUNATELY, UNSCRUPULOUS BUILDERS AND DEVELOPERS ARE NOT SOLELY TO BLAME FOR THIS SITUATION. THE VILLAGE, ITSELF, MUST SHARE SOME OF THE BLAME.

ON MAGNOLIA ROAD, OPPOSITE THE MAGNOLIA INN, THERE IS A SIGN WHICH STATES AS FOLLOWS: "OLD TOWN PATHS — RESTORED IN 2006 THE PATHWAY EXTENDING DOWN THIS BLOCK OF MAGNOLIA ROAD REFLECTS AMERICAS PREEMENINENT LANDSCAPE ARCHITECT FREDERICK LAW OLMSTED'S ORIGINAL VISION FOR A "VILLAGE IN THE TREES". HIS PLAN CONSISTED OF A NETWORK OF PATHS USING THE LOCAL, NATURAL MATERIALS OF SAND AND CLAY TO BLEND IN WITH THE ENVIRONMENT" IMAGINE THAT — AN EARLY ENVIRONMENTALIST LAYING OUT THE PATHWAYS FOR EARLY OLD TOWN PINEHURST!

MY WIFE AND I MOVED TO PINEHURST IN SEPTEMBER 1991, DRAWN HERE BY THE AMBIANCE OF OLD TOWN. AT THAT TIME, A SAND/CLAY PATHWAY RAN ALONG EVERETTE ROAD IN FRONT OF MY HOME, WHICH WAS MAINTAINED, PERIODICALLY, BY THE VILLAGE. I'M SURE THAT MAYOR STRICKLAND AND COUNCIL MEMBER KEVIN DRUM, LONG TIME RESIDENTS OF OLD TOWN PINEHURST, REMEMBER THESE SAND/CLAY PATHWAYS BETTER THAN I DO. IN FACT, EARLY EDITIONS OF THE PDO DESCRIBED IN DETAIL THE LAYOUT

OF THE VILLAGE'S ROW OR STREETSCAPE IN OLD TOWN: ALTERNATING MAGNOLIA OR HOLLY TREES LOCATED IN A SWALE WITH BUSHES INTERSPERSED BETWEEN THEM PROTECTING THE SAND/CLAY PATHWAY FROM THE STREET.

THE NEIGHBORHOOD SURROUNDING PINEHURST ELEMENTARY SCHOOL, BOUNDED BY SHORT, PAGE, FIELDS AND DUNDEE ROADS STILL RETAIN VESTAGES OF THIS SAND/CLAY NETWORK TO THIS DAY.

DURING THE BEFORE MENTIONED PLANNING AND ZONING BOARD MEETING, IT WAS STATED THAT THE NATIONAL PARK SERVICE WOULD BE CONDUCTING AN AUDIT TO DETERMINE OUR HISTORIC DISTRICT STATUS. CONTRARY TO SOME, I CONSIDER THIS HISTORIC DISTRICT STATUS TO BE ESSENTIAL TO THE WELL-BEING OF OLD TOWN PINEHURST. OTHERWISE, IT IS JUST ANYWHERE U.S.A.! WHAT BETTER WAY TO HELP MAINTAIN THIS HISTORIC DISTRICT STATUS THAN BY RE-FURBISHING THESE HISTORIC SAND/CLAY PATHWAYS IN THIS NEIGHBORHOOD SURROUNDING PINEHURST ELEMENTARY?

THERE IS A PRIOR HISTORY OF OUR NEIGHBORHOOD WORKING IN TANDEM WITH THE VILLAGE TO SOLVE A ROW PROBLEM. APPROXIMATELY 15 YEARS AGO, THERE AROSE AN ACUTE TRAFFIC PROBLEM ON KELLY ROAD WHEN DROPPING OFF OR PICKING UP CHILDREN AT PINEHURST ELEMENTARY. A GROUP WAS FORMED CALLED "THE NEIGHBORS" WHO APPROACHED ANDY WILKERSON, THE VILLAGE MANAGER WITH A PLAN TO RE-PLANT THE BUSHES BETWEEN THE EXISTING TREES ON THE SCHOOL SIDE OF KELLY BETWEEN EVERETTE AND DUNDEE ROADS. THIS WAS ACCOMPLISHED AND THE VILLAGE RESTORED THE SAND/CLAY PATH FROM PAGE ROAD TO DUNDEE ROAD, PROVIDING A SAFE, SECURE WALKWAY FOR THESE CHILDREN AND/OR THEIR PARENTS. THE NEIGHBORS HAVE MAINTAINED THESE BUSHES EVER SINCE.

IN CLOSING I ASK MAYOR STRICKLAND, THE MEMBERS OF THE VILLAGE COUNCIL AND THE AUDIENCE, EITHER ACTUAL OR VIRTUAL TO DRIVE DOWN KELLY ROAD FROM DUNDEE TO EVERETTE

ROAD AND SEE FOR YOURSELVES THE DAMAGE THAT HAS BEEN DONE TO THIS STREETSCAPE BY CONSTRUCTION AND/OR POWER CREWS DURING THE DEVELOPMENT OF THE NEW, ENLARGED PINEHURST ELEMENTARY SCHOOL.

THIS NEIGHBORHOOD MAY BE OBLIGED TO PUT UP WITH TWO YEARS OR SO OF CONSTRUCTION TRAFFIC AND NOISE AND UNTOLD YEARS OF TRAFFIC CONGESTION ON OUR QUIET RESIDENTIAL STREETS, BUT WE SHOULD NOT BE OBLIGED TO LIVE WITH THIS STREETSCAPE NIGHTMARE, ESPECIALLY BEING AN INTEGRAL PART OF OLD TOWN AND THE PINEHURST HISTORIC DISTRICT.

PLEASE USE THIS OPPORTUNITY TO DEVELOP A STREETSCAPE RENEWAL PROGRAM FOR THIS NEIGHBORHOOD AS A PARTIAL ARGUMENT FOR A CONTINUED PINEHURST HISTORIC DISTRICT

Reviewed in detail with Alex, March 5th

Questions

Re:

An Ordinance Amending the Village of Pinehurst Development Ordinance

Submitted by:

Bart O'Connor

to Council March 9, 2021

1) What changes are being made?

2) Why are some lines/provisions "lined out?" p. 9

3) 8", or larger, diameter oaks are classified as "Protected." p. 2

   I believe many homeowners and landscape professionals would strongly disagree with the appearance and value of an oak.

4) Some language throughout the Ordinance is unnecessarily complicated. For example, the definition of the <u>frontage of a property</u> is: p. 2

   "The front yard is equal to the depth of the front yard setback of the zoning district extended to the side property lines."

   Why not simply: "The front yard is measured at the setback line.

5) What is a "Flag Lot Yard? p. 3

6) What is the average cost of a Tree Survey for a residential property? p. 4

7) The definition of "Tree Removal" includes, among many things, the . . . "paving with concrete, asphalt, or other impervious material within the <u>drip line.</u> p. 4

   On a given property, this can prevent significant landscape design opportunities.

8) Why is a Landscape Designer omitted from the group preparing a Tree Survey? p. 5

9) Why is only one 20' driveway allowance permitted? Why not two for circular driveways? p. 6

10) The provision to plant trees 15' apart at the front of a residential property can hinder an attractive landscape presentation. Why is this mandated? p. 6

11) Why is there a mandate to plant trees at specific intervals at side and rear sections of property if adjourning properties are "fenced" with trees shrubs? p. 6

12) There is a 33% to 40% chance that planting a 3" diameter pine tree will fai1. p. 9

Why is this requirement demanded, knowing that an expensive replacement will be needed at a later date and worrying that the replacement will never happen.

13) Why are berms limited to two horizontal vs. one vertical? p. 11

14) Size of shrubs are mandated as follows: "A minimum of 24" in height. . . that can reach 4' to 5' in height and 3' in width . . ." p. 12 & 21

This might be better phrased by the mandatory 5 gallon size for foundation plants only . . . and not other plantings where smaller presentations are desirable.

15) Instructions on pages 13 thru 19 are laborious and, in some instances, repetitive. This can be reduced.

16) What is the rationale for the following mandate? p. 13

"Tree planting areas shall be located such that no parking space is farther than 75' from a tree trunk."

17) It is mandated that . . . "At least one half of planted trees shall be Longleaf Pines." p. 20

Plant selection is a very personal choice. What is the basis of this mandate? Can It legally be mandated?

18) In 20 pages of regulations, no mention is made, nor any recognition given to the problem of newly planted trees and shrubs that die. Why?

What is the follow up procedure?

From: Larry Johnson <larrav84@gmail.com>
Sent: Monday, March 8, 2021 4:34 PM
To: Public Comments
Subject: Tree Ordinance

I recently was informed about the upcoming vote on the new tree ordinance that would create a fee from the village if the homeowner has a tree removed. I understand the concern to keep the look of Pinehurst intact. However with that said this seems to be just a way to generate more revenue.

First, the trees are part of the property which the homeowner owns, and are not owned by the village. So for the village to charge the homeowner a fee to remove something that belongs to the homeowner seems unfair.

Second and more importantly, more homeowners have a tree removed either when the tree is not healthy or is a threat to property or life. It will be the homeowners who has to bear the responsibility of the damage that a fallen tree causes. I do not see the village standing up to take that roll.

Lastly I will be following to see which members of the village council vote yes on this ordinance. It will help me make my decision on how to cast my vote the next election. I would encourage all other residents of Pinehurst to feel the same way when they go to the polls next time.
Larry Johnson

From: Allen Ashdown <alashdown@nc.rr.com>
Sent: Monday, March 8, 2021 5:19 PM
To: Public Comments
Subject: Pinehurst proposed ordnance on tree removal

I propose a definite NO to this Proposal.

Al Ashdown
Pinewild CC

From:	Paula Nash
To:	Public Comments
Subject:	Tree Ordinance Comment to be read aloud
Date:	Tuesday, March 9, 2021 3:09:38 PM

The official comment from the Moore County Home Builders Association.

We appreciate our working relationship with the current staff and the Village Council. We have met and discussed the proposed ordinance at length. Alex and Darryn have been very helpful fostering a better relationship with our association. We would like to request that the ordinance be placed on hold to allow VOP staff to work with our association to come up with a solution that will prevent broadstroke clear cutting of lots mainly by large developments and not place the burden on our builders developing single lots. We understand that most of the issues come from major subdivisions and those are few and far between in our Pinehurst area. The single lot development will suffer the most when we do not feel this is the intent of the ordinance. We stand with staff on saving trees and preserving the appearance of Pinehurst. We request the Village Council help us build our community by working together. Please table the ordinance and let's find a way to accomplish the end goal without punishing the innocent builders that work hard to preserve our Pinehurst image. Again, we thank Alex, Cameron and Jeremy Hooper for their willingness to foster a beneficial partnership with our association and its members.

All the best,

Paula Nash
Executive Officer
Moore County Home Builders Association
280 Pinehurst Ave. Suite 6
Southern Pines, NC 2838
910-944-2992 Office
910-494-2306 Cell (call/text)

Notes on Ord# 21-06

As a former P&Z Board Chair and member very familiar with this matter, I'd like to present some history associated with this proposed amendment for Council's benefit and for those in attendance today. This is not a new ordenance put an amendent to existing sections of the PDO that fit right into Chap. 9, Sections 9.5 and 9.14, and Chap. 10.

In the past, several developments in Pinehurst caused a great deal of consternation agonqst the citizens about the removal of almost 100% of the vegetation on the sites, otherwise known as clear cutting. So a seed was planted (pun intented) and the Village did something about it. In Jan., 2018 the P&Z Board was charged to develop an ordinance amendment to address the issue.

P&Z formed a sub-committee and began work, of which I was a member. Shortly thereafter Sen. McInnis proposed a bill that would eliminate local government's ability to address this kind of problem, which would further reduce HOME RULE and, in my opinion, putting the State as the Judge and Jury in charge of controlling how a local government could determine it's own destiny. The sub-comm work came to a stop in late 2018 because no one wanted to tweek the sleeping bear, even though the proposed bill was never passed as law. I understand the proposal

is still smoldering in a back room somewhere in Raleigh.

With the adoption of the 2019 Comp. Long Range Plan and a new Planning Director, the sub-comm. came to life and decided to continue work on what came to be known as the Tree Preservation amendment to the PDO. And that is exactly what the proposed amendment is all about, preserving trees, by requiring areas formed by lot lines and setback lines, within which, existing vegetation can be retained for buffering and screening purposes. It is important to retain as much of the Sandhills Longleaf Pine ecosystem as possible. The longleaf pine, holly, magnolia, and other specimen and champion trees are what gives the Village it's ambiance and charm. This amendment will also help protect and enhance the existing tree canopy along our streets and roads that lends so much to our quality of life that I think was envisioned by Olmsted and Manning, not to mention the habitat for birds, animals, etc that these species provide.

The effort required to get this far involved a great deal of research and study, thanks to Kathy Liles and the P&Z staff and sub-comm. members. Many existing regulations in other communities such as Hilton Head, Charleston, Aberdeen, Southern Pines, our peer group of towns and others were studied and picked apart to create this proposed amendment.

What you have in front of you is a well thought-out, and in my opinion, a workable system that will go a long way to help preserve our trees and ecosystem. It is something new so it most likely will need to be amended from time to time. Because of the newness there must be the ability of the administrative authority to make adjustments on a case by case basis where certain site specific conditions require changes but still retain the intent and purpose of the regulation.

I believe that the Jan., 2018 charge has been completed. The amendment is consistent with several Guiding Principles of the 2019 CLRP. The P&Z Board and staff have recommended the adoption of the amendment. I also strongly urge Council to adopt Ord. #21-06.

Last, but not least, I want to thank Darryn, Alex, Kathy, Kelly and all the P and I staff and sub-comm members for their work in helping to bring this amendment to fruition.

Thank you,
Leo Santorusso

bill reaves
Construction Co.
P.O. Box 648
West End, NC 27376

March 9, 2021

Village of Pinehurst

Village Council Members and Staff

My company, Bill Reaves Construction Co., Inc. has been an active builder in Moore County for over 40 years since 1980. I have served as President of the MCHBA twice in that time. I have also worked with the Village on numerous committees. I worked with the Village during the early 90's to work out issues of Building Moratoria and the creation of the Residential Assurance Fund. I worked with and provide positive input for the present UDO, the Alternative Energy Commission which not only promoted energy concerns, but other "Green" attributes such as Parks and Greenways that the village citizens now enjoy. I do understand the Village goals and the difficulties of creating a PDO that will deal with present and future planning issues.

I am in receipt of a copy of your proposed tree ordinance draft. After review, I am concerned that it is set with problems not thoroughly thought through and will fail to achieve the desired goals.

I will acknowledge that the Longleaf pine is a native species of the Sandhills Area as well as the native fox squirrel, quail, wire grass and the red cockaded woodpecker. Many are a protected species as they should be, however:
We live in a community that was planned many years ago without the benefit of knowing where we would be today. We live in a community where the property available for building new homes are small in size in comparison to our new modern lifestyle. We no longer live with families that build a cottage size home to come visit during the winter months to play golf and escape winter of the brutal north. Families live here permanently, a family unit of 3 or more with a dog or pet and a need for a place for their children to play. Sometimes a couple who are grandparents who would like to have a home large enough to accommodate their extended family for a summer visit.

Most of the lots within the Village limits are zoned as R-5, R-8, R-10 and in some cases R-15. There are properties for residential development that fall under the R-MF, R-20 and R-30 but are not normal of the "In-fill" lots in the Village jurisdiction. The present Village standard for R-5 through R-20 lots have a 10-to-15-foot side yard. The rear yard of R-5 thru R-10 lots are 20 to 25 feet. R-15 to R-30 lots are 30 feet.
Common "Best Practice" of building would be that large trees within 10 to 15 feet of the foundation of a home should be considered to be removed due to potential damage to the foundation of the home. In addition, to provide proper drainage away from the foundation, the grade should slope 6" in 10 feet away from the foundation. It is also a desire of today's new residential consumer to have a least one "zero step entry" into the residence which requires a low foundation.

Your proposed tree ordinance makes many of these practical considerations very difficult to achieve. A tree by your proposal in the sideline setback would be preserved causing potential damage to the foundation, cause un-natural water drainage issues and a potential for a tree damaged by construction falling on a house. Also consider that the damage to property might not be the property that the tree is on, but the neighboring property. In addition, Magnolia trees, Ilex species and other species mentioned are beautiful when they are on someone else's property, but not when they are on your property and you have to clean up the mess.

I can debate that the Village doesn't have the right to tell someone what to do with their property. I can debate property rights. I can debate jurisdiction or authority to pass such an ordinance. We can debate the right and wrong in a court of law, but at the "end of the day" the only ones that walk away from a court case are the two lawyer's that argued the case. Everyone else walks away unsatisfied and with anger.

So, let me propose that we build this together. Let's table a decision for a time to arbitrate. Perhaps a period of 90 days. Create a committee of professionals in the industry to work with your planning staff. Ask for input from professionals in the building industry such as the local Moore County Homebuilders Association. There are also a number of well-respected local engineers, architects and real estate professionals who would be happy to provide help and input.

In closing, let me say: It is my opinion that the council needs to reconsider the proposal and ask the Village staff to seek local knowledge and input before making a final decision on this matter.

Respectfully,

Bill Reaves