Council Member to Report	Partners & Collaborators
John Strickland	Moore County Transportation Committee
	Neighborhood Advisory Committee
	Pinehurst Resort
Judy Davis	Tri-Cities Work Group (Pinehurst, So. Pines, Aberdeen)
	FirstHealth
	Moore County
Lydia Boesch	Convention and Visitors Bureau
	Bicycle and Pedestrian Advisory Committee
Kevin Drum	Triangle J. COG
	Partners in Progress
	NCDOT/TARPO
Jane Hogeman	Beautification Committee
	Moore County Schools
	Pinehurst Business Partners

ORDINANCE #17-02:

AN ORDINANCE PRESCRIBING PROCEDURES FOR DISPOSING OF PERSONAL PROPERTY VALUED AT LESS THAN $10,000

THAT WHEREAS, the Village of Pinehurst from time to time has personal property which is no longer needed or required; and

WHEREAS, North Carolina General Statute 160A-266 authorizes Village Council to adopt procedures for the disposal or exchange of personal property valued at less than $30,000 for any one item or group of items; and

WHEREAS, North Carolina General Statute 160A-270 provides that the Village Council may conduct electronic auctions of the Village's personal property by authorizing the establishment of an electronic auction procedure or by authorizing the use of existing private or public electronic auction services; and

WHEREAS, Village Council desires to adopt procedures for the disposal and exchange of surplus personal property valued at less than $10,000 for any one item or group of items, including but not limited to disposal and exchange by electronic means;

NOW, THEREFORE, BE IT ORDAINED AND ESTABLISHED by the Village Council of Pinehurst, North Carolina, in a regular meeting assembled this 28th day of February, 2017 as follows:

SECTION 1. Property That Can be Disposed of Under this Ordinance. The Village Manager is hereby authorized to declare surplus and dispose of any personal property owned by the Village of Pinehurst when, in his or her judgment, each of the following three criteria are met:

a) the item or group of items to be disposed of has a fair market value of less than ten thousand dollars ($10,000.00);
b) the property is no longer necessary for the conduct of Village business; and,
c) sound property management principles and financial considerations indicate that the interests of the Village of Pinehurst would be best served by disposing of the property.

Personal property that, in the judgment of the Village Manager, meets these three criteria is referred to in this Ordinance as "Surplus Property."

SECTION 2. Methods of Disposition. The Village Manager may dispose of Surplus Property by any means which he or she judges reasonably calculated to secure for the Village the fair market value in money or other consideration and to accomplish the disposal efficiently and economically, including but not limited to the methods of sale provided in Article 12 of North Carolina General Statutes, Chapter 160A-266 and 160A-270. Such sale may be public or private, and with or without notice and minimum waiting period.

SECTION 3. Sale by Electronic Auction. As one of several means of disposing of Surplus Property, the Village Manager is specifically authorized to dispose of Surplus Property by electronic means. The Village Manager is authorized to establish procedures for disposing of Surplus Property by electronic means, and is further authorized to use existing public or private electronic auction services to dispose of Surplus Property. Notwithstanding the requirements of North Carolina General Statute 160A-270, the Village shall not be required to provide advance notice of electronic auctions of such Surplus Property.

SECTION 4. Terms of Disposition. The Surplus Property shall be sold to the party who tenders the highest offer, or exchanged for any property or services useful to the Village of Pinehurst if greater value may be obtained in that manner, and the Village Manager is hereby authorized to execute and deliver any applicable title documents necessary or appropriate to consummate such sale. If no offers are received within a reasonable time, the Village Manager may retain the property for the Village, obtain any reasonably available salvage value, or cause it to be disposed of as waste material. No Surplus Property may be donated except by resolution of the Village Council.

SECTION 5. Records and Reports. The Village's Financial Services Director shall keep a record of all property sold under the authority of this Ordinance and that record shall describe the property sold or exchanged, to whom it was sold, or with whom it was exchanged, and the amount of money or other consideration received for each sale or exchange.

SECTION 6. Delegation. The Village Manager is authorized to delegate any or all of the authority granted or responsibilities assigned under this Ordinance to the Financial Services Director.

SECTION 7. This Ordinance is adopted pursuant to the provisions of North Carolina General Statutes 160A-266 and 160A-270.

THIS ORDINANCE passed and adopted this 28th day of February, 2017.

VILLAGE OF PINEHURST
VILLAGE COUNCIL

(Municipal Seal)

By: Nancy Roy Fiorillo
Nancy Roy Fiorillo, Mayor

Attest:

Lauren M. Craig, Village Clerk

Approved as to Form:

Michael J. Newman, Village Attorney

VILLAGE COUNCIL
PLANNING AND ZONING BOARD
MINUTES FOR SPECIAL MEETING OF FEBRUARY 18, 2021
ASSEMBLY HALL
395 MAGNOLIA ROAD
PINEHURST, NORTH CAROLINA

DRAFT

The Pinehurst Village Council and the Planning and Zoning Board held a special joint meeting at 4:00 p.m., Thursday, February 18, 2021 in Assembly Hall at Village Hall, 395 Magnolia Road, Pinehurst, North Carolina and via the electronic meeting platform ZOOM.

The following were in remote attendance:

Mr. John C. Strickland, Mayor
Ms. Judy Davis, Mayor Pro Tem
Ms. Lydia Boesch, Councilmember
Mr. Kevin Drum, Councilmember
Ms. Jane Hogeman, Councilmember
Ms. Cyndie Burnett, Planning and Zoning Board Chair
Mr. Jeramy Hooper, 1st Vice Chair Planning and Zoning Board
Ms. Julia Latham, 2nd Vice Chair Planning and Zoning Board
Mr. Phillip Shumaker, Planning and Zoning Board Member
Mr. Jack Farrell, Planning and Zoning Board Member
Mr. Paul Roberts, Planning and Zoning Board Member
Mr. David Alzamora, Planning and Zoning Board Member
Mr. Matt Jones, Planning and Zoning Board Member
Ms. Sonja Rothstein, Planning and Zoning Board Member
Mr. Jeffrey Sanborn, Village Manager
Ms. Natalie Hawkins, Assistant Village Manager of Administration

The following were in attendance in Assembly Hall:

Ms. Beth Dunn, Village Clerk

1. **Call to Order.**
   Mayor John Strickland and Cyndie Burnett, Planning and Zoning Board Chair, called the special meeting to order. Councilmembers and the Planning Board Members introduced their selves.

2. **Discuss Potential Administrative Needs and Implementation of 2019 Comprehensive Plan Strategies.**
   Mayor Strickland stated that Councilmembers were in favor of all types training for the Planning Boards, including training on the history of Pinehurst. Councilmember Hogeman stated it may be helpful to review the Pinehurst Development Ordinance (PDO). Darryn Burich, Planning and Inspections Director, shared the School of Government online training and materials available to board members. Jeff Sanborn, Village Manager, stated we would like a build a systematic approach for training for long term needs.

   Mayor Strickland asked that as the Planning Board works through issues on applications that they red flag any issues. Councilmember Drum stated if there is something we need to fix let us know. Mr. Sanborn stated as recommendations on applications come to Council from the Planning and Zoning Board maybe there could be a separate section in the report for areas of the PDO that were hard to interrupt. Councilmember Hogeman stated that the County receives a list of Development Ordinance

changes quarterly and has suggested this in the past as a way to work on PDO issues. Councilmember Boesch stated that walking the applicant's site, actually putting your feet and eyes on the ground, helps her work through the application. Ms. Burnett stated the Planning Board also walks the sites and now have badges for identification. Julia Latham, Planning and Zoning Board Member, stated that staff are the experts at navigating the PDO and the board relies on them for that expertise. Ms. Latham also noted that the Planning and Zoning have already flagged signage and golf course setbacks as areas of concern in the PDO. Mr. Burich stated staff plans to share items in the PDO that they have identified as problems and are creating a matrix for these. Alex Cameron, Senior Planner, reviewed a list of some of the PDO items already identified to be amended.

Mayor Strickland explained there has been some discussion on how to work on some of the PDO issues. The group discussed various ways to form subcommittees to get the work completed and balance the time commitment of the Planning and Zoning Board Members. Mayor Strickland asked the group if there were any questions on the Small Area Plans or Moratorium. Paul Roberts, Planning and Zoning Board Member, stated that right now there is conflict between the PDO, which is statutory, and the Comprehensive Plan, which is only regulatory. David Alzamora, Planning and Zoning Board Member agreed there is conflict and noted that hopefully these actions will help fix some of the issues.

Mayor Strickland Stated that Council was not satisfied with meeting applicants and appointing them all in the same meeting. Now applicants are given to Council a couple months ahead of the appointment to give Council time to meet the applicants. Ms. Burnett stated she would also like the Planning and Zoning Board to have a chance to look at the resume of the member being consider for appointment so that they may provide feedback.

Mayor Strickland stated that the current Municipal Code states that Council is to appoint the 5 primary members of the Board of Adjustment and he would like to have a discussion with Mike Newman, Village Attorney, and Julia Latham, Board of Adjustment Chair, to discuss this process. Currently the Board of Adjustment selects the sitting primary and alternate members from the current members. Ms. Latham stated she glad to discuss with Mr. Newman, but believes the current process is ok and compliant with the Municipal Code, as members are appointed by Council to both the Planning Board and Board of Adjustment. Mr. Sanborn stated that Mr. Newman has indicated to him that the current process is acceptable with what is written in the code.

3. Motion to Adjourn the Special Council Meeting

Council and the Planning and Zoning Board unanimously approved to adjourn the special joint meeting, at 5:43 p.m.

Respectfully Submitted,

Beth Dunn,
Village Clerk

A videotape of this meeting is located on the Village website: www.vopnc.org

Vision: The Village of Pinehurst is a charming, vibrant community which reflects our rich history and traditions.
Mission: Promote, enhance, and sustain the quality of life for residents, businesses, and visitors.
Values: Service, Initiative, Teamwork, and Improvement

DRAFT

ORDINANCE #21-05:

AN ORDINANCE AMENDING THE ORDINANCE APPROPRIATING FUNDS FOR OPERATIONS OF THE VILLAGE OF PINEHURST FOR FISCAL YEAR 2021, REGARDING REVENUES AND EXPENDITURES OF THE GENERAL FUND (LAND FOR POTENTIAL FUTURE FIRE STATION)

THAT WHEREAS, the Village of Pinehurst desires to purchase land as a location for a potential future fire station; and

WHEREAS, a portion of funding appropriated in the FY 2021 Budget for this fire station land purchase was used earlier this fiscal year to purchase a parcel of land adjacent to West Pinehurst Park; and

WHEREAS, remaining appropriated funds are not sufficient to cover the full cost of the land purchase;

NOW, THEREFORE, BE IT RESOLVED by the Village Council of the Village of Pinehurst, North Carolina, in the regular meeting assembled this 9th day of March 2021, as follows:

SECTION 1. To amend the General Fund with regard to revenues and expenditures, the revenue and expenditure accounts are to be changed as follows:

Account No.	Account Name	Debit	Credit
10-10-320-7100	Capital Outlay: Land	$162,000	
10-00-190-3905	Fund Balance Appropriated		$ 162,000

SECTION 2. Copies of this budget amendment shall be furnished to the Village Clerk, Village Manager and to the Financial Services Director for their direction and implementation.

THIS ORDINANCE passed and adopted this 9th day of March 2021.

VILLAGE OF PINEHURST
VILLAGE COUNCIL

(Municipal Seal)

By: _____
John C. Strickland, Mayor

Attest:

_____
Kelly Chance, Village Clerk

Approved as to Form:

_____
Michael J. Newman, Village Attorney

DRAFT

RESOLUTION #21-06:

A RESOLUTION AUTHORIZING THE VILLAGE MANAGER TO DISPOSE OF CERTAIN SURPLUS CAPITAL ASSETS.

THAT WHEREAS, Village Ordinance #17-02 authorizes the Village Manager to sell surplus assets with an estimated market of less than $10,000; and

WHEREAS, the Village desires to dispose of the following assets that may exceed an estimated value of $10,000:

2004	Ford F-650 XL Super Duty	VIN #: 3FRNF65274V653748,
2006	Harley Electra Glide Motorcycle	VIN #: 1HD1FMW106Y680940; and

WHEREAS, pursuant to North Carolina General Statutes 160A-266(a), the Village Manager may dispose of the personal property, as approved by the governing body, subject to certain limitations, by any of the following methods:

Private negotiation and sale,
Advertisement for sealed bids,
Negotiated offer, advertisement, and upset bid,
Public auction (including electronic auction), or
Exchange; and

WHEREAS, the Village is required to publish the contents of this resolution after its adoption and no sale shall be consummated thereunder until 10 days after its publication;

NOW, THEREFORE, BE IT RESOLVED by the Village Council of the Village of Pinehurst, North Carolina, in the regular meeting assembled this 9th day of March, 2021 as follows:

SECTION 1. The Village Manager is authorized to sell the surplus capital asset listed above using any of the means approved by NCGS 160A-266(a).

SECTION 2. Copies of this resolution shall be furnished to the Clerk to the Village Council, Village Manager, and Financial Services Director for their direction and implementation.

THIS RESOLUTION passed and adopted this 9th day of March, 2021.

(Municipal Seal)

VILLAGE OF PINEHURST
VILLAGE COUNCIL

By: _____
John C. Strickland, Mayor

DRAFT

Attest:

Approved as to Form:

_____
Kelly Chance, Village Clerk

_____
Michael J. Newman, Village Attorney

DRAFT

VILLAGE COUNCIL
MINUTES FOR REGULAR MEETING OF FEBRUARY 23, 2021
ASSEMBLY HALL
395 MAGNOLIA ROAD
PINEHURST, NORTH CAROLINA
4:30 PM

The Pinehurst Village Council held a Regular Meeting at 4:30 p.m., Tuesday, February 23, 2021 in the Assembly Hall of Pinehurst Village Hall, 395 Magnolia Road, Pinehurst, North Carolina and via the electronic meeting platform ZOOM. The meeting was streamed in real time on the Village's website.

The following were in remote attendance:
Mr. John C. Strickland, Mayor
Mr. Jeffrey M. Sanborn, Village Manager
Ms. Judy Davis, Mayor Pro Tem
Ms. Lydia Boesch, Councilmember
Mr. Kevin Drum, Councilmember
Ms. Jane Hogeman, Councilmember

The following were in attendance in Assembly Hall:
Ms. Beth Dunn, Village Clerk

And approximately 10 attendees, including 9 staff.

1. Call to Order.
Mayor Strickland, called the Village Council meeting to order.

2. Reports:

Village Manager

- Kelly Chance was hired as the new Village Clerk and will begin next Monday. Beth Dunn will be transitioning into Human Resources. Genesis Harrod was hired as the new Transportation Planner and she has experience and an educational background in engineering and transportation planning, she will begin on March 15th.

Village Council

- Mayor Strickland stated the Council will continue to meet virtually until the COVID metrics improve. Council and Planning and Zoning Board held a joint meeting last week with a very good exchange of ideas. He attended the monthly Pinehurst Business Partners meeting and despite COVID impacts they are still a vibrant group. The President of the United States announced a program to assist Small Businesses, 20 or less employees, and he hopes business will take advantage of the help from the Federal Government.
- Councilmember Drum stated he attended the Partners and Progress speaker, by Mayor Joe Riley of Charleston, was very impactful. He would love to get a copy of the video to share with anyone involved with municipal planning.
- Councilmember Hogeman stated it was uplifting to hear all the success coming from the Pinehurst Business Partners.

3. **Motion to Approve Consent Agenda.**

All items listed below are considered routine or have been discussed at length in previous meetings and will be enacted by one motion. No separate discussion will be held unless requested by a member of the Village Council.

- Resolution 21-04 Honoring the Service of a Planning and Zoning Board Member.
- Public Safety Reports
  - January 2021, Police Report
  - January 2021, Fire Report
- Approval of Village Council Meeting Minutes.
  - February 9, 2021 Regular Meeting
  - February 9, 2021 Work Session

End of Consent Agenda.
Upon a motion by Councilmember Boesch, seconded by Councilmember Drum, Council unanimously approved the Consent agenda by a vote of 5-0.

4. **Q2 Update on the Status of the FY 2021 Strategic Operating Plan Implementation.**
Lauren Craig, Organizational Performance Director, explained the fiscal (FY) 2021 Strategic Operating Plan includes 8 Initiative Action Plans (IAPs). As of December 31, 2020, of the 7 IAPs scheduled to begin, 6 were in progress and on schedule, and 1 IAP was removed. Ms. Craig explained that the IAPs include metrics to track how effective the Village is at accomplishing targeted results. As of December 31, 2020, the Village achieved projected performance for 5, or 83%, of the 6 IAPs tracking metrics in Q2.

Ms. Craig explained that after evaluation by the Village Manager and Police Chief, staff recommend removing the IAP for Police Department Accreditation through CALEA. The Police Department will now pursue accreditation through the NC Law Enforcement Accreditation, a division of NC Training and Standards, and this will be listed as a project on the OFI list moving forward. Chief Webb stated that training and standards holds the certifications for what they do. Chief Webb stated they are starting a pilot programing this year which we have asked to be part of. The program is much more affordable and they will getting the same advice.

Ms. Criag stated the IAP for the Small Area Plans continues to move forward. Ms. Craig noted that the IAP to develop a comprehensive storm water master plan, is scheduled to begin in Q3 of FY 2021. The number of MYVOP stormwater requests exceeded the goal of 65, with 121 requests received, due to the large amounts of rainfall this quarter.

5. **Presentation of Mid-Year Financial Projections and Budget Amendment.**
Brooke Hunter, Financial Services Director, explained after reviewing the quarterly financial statements she estimates that the Village's expenditures will exceed its revenues at year-end by approximately $236,000. While this is a loss, projected expenditures include a large reappropriation of over $1 million related to purchases and projects that were incomplete as of June 30, 2020 and continued into FY 2021 like items such as resurfacing projects and a new rescue truck. Total fund balance for the General Fund at the beginning of this fiscal year was $11,229,000 and Ms. Hunter is projecting that fund balance will decrease to $10,994,000 by the close of this fiscal year.

Ms. Hunter explained that in total, the proposed budget amendment will increase the Village's FY 2021 Budget by $8,650 and will reduce fund balance appropriated by $235,650. Ms. Hunter noted that by adopting the adjustments within the revenue and expenditure accounts will enable the Village to prepare more accurate budget estimates for the next fiscal year and maintain statutory compliance required by the Local Government Budget and Fiscal Control Act.

Upon a motion by Councilmember Drum, seconded by Councilmember Hogeman Council unanimously approved ordinance 21-04 amending the ordinance appropriating funds for operations, regarding revenues and expenditures of the General Fund for the Village of Pinehurst, by a vote of 5-0.

DRAFT

6. Discuss and Consider Resolution Amending the Village of Pinehurst Fees and Charges Schedule.

Brooke Hunter, Financial Services Director, explained that the Village's Fees and Charges Policy calls for the periodic review of all fees and charges. Staff conducted a review of the Village's Fees and Charges Schedule and recommended changes to charges in the areas of Fire and Recreation.

Ms. Hunter explained that Fire Sprinkler Systems, Fire Alarm/Detection Systems, and Standpipe Systems all require plan review by the Fire Department. The amount of time required to review these plans is dependent on the square footage of the building. To capture the actual costs of reviewing these plans and performing the inspection, staff proposes changing the unit of measurement to $100 per permit plus $0.01 per square foot. Also, Hood Suppression System permits were formerly charged under "Other Permits." However, since they are commonly required, staff is proposing to list this permit separately in the fee schedule and increase the fee to $75 like all "Other Permits."

Ms. Hunter noted that other required permits are proposed to increase from $25 to $75 to more accurately cover the actual costs associated with issuing the permits. The Fee Schedule formerly listed "Installation or Removal of Above Ground Storage Tanks or Underground Storage Tanks" and "Fireworks Display" permits separately in the fee schedule. Staff recommends removing these separately listed permits and charge for them under "Other Permits" since they are not as common.

Ms. Hunter stated that Fire staff recommends adding "Re-review fees for 3rd and subsequent submission" of $100 to cover the cost of repeat reviews. This is consistent with the Planning & Inspections Department, who also begins charging re-review fees upon the third review. Lastly, fines to "Lift a Stop Work Order" and for "Work performed without a permit," are consistent with Planning & Inspections Department fines. The intent is to discourage work performed without a permit.

Ms. Hunter explained that for the Parks and Recreation Department, under the Fair Barn, staff recommends reinstating the "Additional Hour" fee of $150 per hour above the daily allowed hour usage (8 hours for weekdays and 14 hours for weekends). This fee was eliminated last year and included as part of the Fair Barn package pricing but prevents us from recouping the expense when events exceed the maximum limit. Also, a "Drop In Fee" of $7 per activity per day is requested to be added to allow participants to attend individual sessions of program and Open Gym activities. The drop in fee is recommended to be added to the schedule immediately so participants can take advantage now. Staff is recommending adding "Event Admission" fees of $2 per person ages 12 & under and $5 per person ages 13 & over. This fee would apply to athletic tournaments held in VOP recreation facilities. This fee is consistent with the rates listed in the Statewide Athletics Committee Manual. Lastly, in Parks and Recreation, non-profit rates have been added to equal the resident rates for all facility rentals in recreation facilities, including the Arboretum, Tufts Park, and the Community Center. This is consistent with the fees that are already listed for the shelters and athletic fields. No changes to dollar amounts are being recommended.

Mayor Pro Tem Davis suggested making the change to the drop in fee on March 1st to the drop in to allow time to get the word out. Mayor Strickland asked if the special incentives put in place last year at the Harness Track have effected rentals and should we look any changes to that. Mark Wagner, Parks and Recreation Director, stated that COVID has impacted the number of horses back this season due to restrictions at other facilities. Mr. Wagner stated they are looking at other ways to promote the Harness Track. Mayor Strickland asked why the cost for Tufts Park was lower than other park venues. Mr. Wagner stated that Tufts park is smaller and not as private to hold weddings.

Upon a motion by Mayor Pro Tem Davis, seconded by Councilmember Boesch, Council unanimously approved resolution 21-05 amending the Village of Pinehurst Fees and Charges Schedule, by a vote of 5-0.

7. Other Business.

- Councilmember Drum suggested finding a way to share the video from the Pinehurst Business Partners meeting with Joe Riley.

8. Comments from Attendees.

- Justin Bradford, Pinehurst Resident, stated he has been a resident of Pinehurst since 2003 and has vactioned here since

the 1980's so the community is very near and dear to him. He is a steward of the disc golf course. He noted he had prepared remarks about current events. After the events at the capital on January 6th a wealthy business owner in Flordia, named Alfie Oaks, made a comments referencing slaying traitors. He noted Ms. Boesch sent an email to thousands of people to join the Alife Oaks uprising. He has some concerns with an elected official of the Village calling for an uprising, that the lock down ends on March 21st and no more masks.

- Timothy Kempf, 1290 Burning Tree Road, submitted the following comment by email: I respectfully request that the Village of Pinehurst submit and vote on an ordinance to declare the Village of Pinehurst a place that the constitutions for the United States of America and the state of North Carolina will not be usurped by executive orders by the President of the US and/or the Governor of North Carolina. The trampling of our rights has got to stop. Businesses should be allowed to operate fully, citizens should be able to wear or not wear medical devices in accordance with their beliefs and advice from family physicians, and should be able to express themselves freely. I can only assume from the year long state of emergency, more rights will be targeted for further infringement. The time to act is now and at the lowest levels of government. I am committed to a life of liberty and pursuing happiness. If need be, I will go door to door in the community and petition your constituents. There are numerous examples of cities, counties, and states taking these actions nationwide. Please follow their courageous lead.

9. Motion to Adjourn the Regular Meeting.

Upon a motion by Councilmember Drum seconded by Councilmember Hogeman, Council unanimously approved to adjourn the regular meeting, by a vote of 5-0 at 5:50 p.m.

Respectfully Submitted,

Beth Dunn,
Village Clerk

A videotape of this meeting is located on the Village website: www.vopnc.org

Vision: The Village of Pinehurst is a charming, vibrant community which reflects our rich history and traditions.
Mission: Promote, enhance, and sustain the quality of life for residents, businesses, and visitors.
Values: Service, Initiative, Teamwork, and Improvement

DRAFT

PLANNING AND ZONING BOARD STATEMENT OF REASONALBLENESS AND CONSISTENCY WITH THE 2019 COMPREHENSIVE PLAN FEBRUARY 4, 2021 REGULAR MEETING

AMENDMENTS TO THE PINEHURST DEVELOPMENT ORDINANCE FOR SECTIONS:

9.5 Landscaping Requirements
9.14 Design Standards for Single Family Dwellings
(6) Tree Conservation and Newly Installed Trees and Plants
10.2 Definitions

The Village of Pinehurst Planning and Zoning Board finds that:

The 2019 Comprehensive Plan set seven Guiding Principles which emerged to expand upon the vision of the Village, help achieve community goals and preserve and enhance the high quality of life. The Comprehensive Plan also set ten Strategic Opportunites as well as Implementation Strategies which are actionable recommendations to address the strategic opportunites.

One of the Strategic Opportunities on page 26 is to promote high quality development by updating and modernizing the Pinehurst Development Ordinance to ensure furture development is of the desired character favored by Pinehurst residents.

On page 124 under Guiding Principle 3 "Places to Live" for Protect & Enhance Existing Neighborhoods; Improve Neighborhood Appearance, Implementation Strategy 3.1 states the Village should periodically evaluate standards for landscape design and planting and amend standards as necessary to meet the needs and desires of the Village.

On page 203 under Guiding Principle 7 "All things Green: Parks, Open Spaces & Natural Resources" for Protecting Pinehurst's Natural Resources; Preserve Trees states the *urban forest is an important aesthetic, economic, and environmental asset to Pinehurst. It contributes positively to the character of the Village, the health of the environment, the quality of life of residents, and the experience of visitors.* Implementation Strategy 7.6 further suggests the Village to enhance *the Tree Preservation Program and standards for tree planting and preservation in the Pinehurst Development Ordinance.*

Therefore, the Village of Pinehurst Planning and Zoning Board finds that the proposed amendments to the Pinehurst Development Ordinance **IS** consistent with the 2019 Comprehensive Plan and therefore recommends **APPROVAL** of the amendments to Village Council. Achieving goals consistent with the Comprehensive Plan is deemed to be reasonable and in the best interest of the public.

This is the 12th day of February, 2021

Cyndie Burnett

Chair of the Planning and Zoning Board

Kelly Brown

Kelly Brown
Clerk to the Planning and Zoning Board

Cc: Darryn Burich
Alex Cameron
Kelly Brown

1895

VILLAGE OF

PINEHURST

PLANNING AND INSPECTIONS DEPARTMENT COUNCIL STAFF MEMO

To: Mayor Strickland and Village Council
From: Darryn Burich, Director of Planning and Inspections
Cc: Jeff Sanborn, Village Manager and Natalie Dean Hawkins, Assistant Village Manager
Date: March 4, 2021
Subject: Proposed PDO Amendments to create buffer development standards.

This staff memo supplements Senior Planner Alex Cameron's staff report dated March 4, 2021 on the proposed PDO amendments to Sections 9.5, 9.14, and 10.2.

Council is being asked to approve several amendments to the Pinehurst Development Ordinance (PDO) to address buffering and planting requirements for development within the Village's zoning jurisdication including the ETJ. The amendments relate primarily to lessening the impact of development activity by creating perimeter buffer yard requirements that will be applied to activities considered to be "development" as defined by the PDO, which amendments include an updated definition of "development" to mirror state statute. The buffer yard requirements require a certain number of trees by defined yard (e.g. front, side, rear, side street) with the highest ratio of trees being required along rights-of-way due to the more intense nature of activity that occurs in the right-of-way. Because the Village values the existing mature tree canopy, provisions have been included to allow existing qualifying trees to be used and credited towards planting requirements. The planting credits can have the impact of lessening the amount of trees that would need to be planted.

The proposed ordinance under consideration by Council has been modified slightly since Planning and Zoning Board action to clarify various aspects to make them clearer to understand, less redundant, and more enforceable based on concerns staff has heard since the Council work session on 2/23/21. Some of the highlighted changes are as follows:

- Section 9.5.1 Purpose and Scope language was changed to clarify that the regulations relate to establishing buffer for development.
- Section 9.5.1.1(F)(d) Definition added a classification for "side street" yard to address corner lots.

- Section 9.5.1.7: (A) Trees Removed in Violation staff is recommending alternative language that simply requires compliance with the buffer yard planting requirements versus the more punitive tree replanting schedule proposed that requires a 2:1 ratio to replant. Staff feels that existing PDO provisions regarding double permit fees will suffice and that ultimately compliance with the planting schedule is the appropriate measure. Staff also feels that replanting at a 2:1 ratio might create crowding issues with trees and result in less healthy trees. Staff is recommending adopting the alternate language proposed:
    - 9.5.1.7 Trees Removed in Violation. Replacement trees shall be planted according to Section/Table 9.5.1.4

The Planning and Zoning Board recommended the changes at its February 4, 2021 meeting and adopted the Comprehensive Plan Consistency Statement.

The regulations as proposed align with various 2019 Comprehensive Plan recommendations including the Guiding Principles as follows:

- Guiding Principle 1: to retain the small-town charm, scale, and character of the community to ensure a high quality life; and
- Guiding Principle 3: to protect and enhance the quality and character of existing residential neighborhoods; and
- Guiding Principle 7 to preserve, conserve, and feature Pinehurst's natural resources.

The regulations as proposed align directly with 2019 Comprehensive Plan implementation recommendation strategy 7.6 that recommends enhancing PDO tree planting standards and identifies as such being "very important" to the community.

The proposed regulations also follow through with recommendations from the 2003 and 2010 Comprehensive Plans which indicate the importance of such regulations to overall community. .

<u>Comprehensive Plan Consistency:</u>

The 2019 Comprehensive Plan sets seven Guiding Principles which emerged to expand upon the vision of the Village, help achieve community goals and preserve and enhance the high quality of life. The Comprehensive Plan also set ten Strategic Opportunities as well as Implementation Strategies which are actionable recommendations to address the strategic opportunities.

One of the Strategic Opportunities on page 26 is to promote high quality development by updating and modernizing the Pinehurst Development Ordinance to ensure future development is of the desired character favored by Pinehurst residents.

On page 124 under Guiding Principle 3 "Places to Live" for Protect & Enhance Existing Neighborhoods; Improve Neighborhood Appearance, Implementation Strategy 3.1 states the Village should periodically evaluate standards for landscape design and planting and amend standards as necessary to meet the needs and desires of the Village.

On page 203 under Guiding Principle 7 "All things Green: Parks, Open Spaces & Natural Resources" for Protecting Pinehurst's Natural Resources; Preserve Trees states the *urban forest is an important aesthetic, economic, and environmental asset to Pinehurst. It contributes positively to the character of the Village, the health of the environment, the quality of life of residents, and the experience of visitors*. Implementation Strategy 7.6 further suggests the Village to enhance *the Tree Preservation Program and standards for tree planting and preservation in the Pinehurst Development Ordinance*.

Staff Recommendation

Staff recommends that Village Council find the proposed amendment reasonable and consistent with the 2019 Comprehensive Plan as reflected in Attachment A and approve PDO text amendments to Sections 9.5, 9.14 and 10.2 as proposed with the recommendation that Section 9.5.1.7 Trees Removed in Violation (A) be changed to:

9.5.1.7 Trees Removed in Violation. Replacement trees shall be planted according to Section/Table 9.5.1.4.

VILLAGE COUNCIL
MINUTES FOR WORK SESSION OF FEBRUARY 23, 2021
ASSEMBLY HALL
395 MAGNOLIA ROAD
PINEHURST, NORTH CAROLINA

IMMEDIATLEY FOLLOWING THE REGULAR MEETING

The Pinehurst Village Council held a work session at 6:00 p.m., Tuesday, February 23, 2021, in the Assembly Hall of Pinehurst Village Hall, 395 Magnolia Road, Pinehurst, North Carolina and via the electronic meeting platform ZOOM. The meeting was streamed in real time on the Village's website.

The follow were in remote attendance:

Mr. John C. Strickland, Mayor
Ms. Judy Davis, Mayor Pro Tem
Ms. Lydia Boesch, Councilmember
Mr. Kevin Drum, Councilmember
Ms. Jane Hogeman, Councilmember
Mr. Jeffrey Sanborn, Village Manager

The following were in attendance in Assembly Hall:

Ms. Beth Dunn, Village Clerk

And approximately 4 attendee, including 4 staff.

1. **Call to Order.**
   Mayor John Strickland, called the Council work session to order.

2. **Discuss Draft Tree Preservation Ordinance.**
   Mayor Strickland explained they will discuss the mechanics and the history of the proposed ordinance and also noted a public hearing is scheduled for March 9, 2021. Darryn Burich, Planning and Inspections Director, reviewed the language in the original Land Use Policy adopted on July 16, 1981 which spoke to preservation of environmental and aesthetic character of Pinehurst. Mr. Burich explained the proposed ordinance is a development standard to promote preservation of the Village's tree canopy through enhancing current development standards pertaining to development. Mr. Burich explained the benefits to preserving trees and noted there are current tree landscaping requirements for the number of trees required on a lot but no requirement for the placement of the trees. Mr. Burich explained that in the Comprehensive Plans dating back to 1995, there have been references to the goal of tree preservation. The purpose and intent of the proposed ordinance is to preserve trees along the outer perimeter of parcels of land such that buffer years are retained/created to reduce visual effects and the impacts of traffic, noise, dust, and odor as well as to protect the privacy of neighbors. The objective of the proposal is to enhance the current landscaping/buffering requirements within the Pinehurst Development Ordinance (PDO) in line with the recently adopted 2019 Comprehensive Plan, create buffer yards that are triggered when development permit comes into play, mass clear cutting of lots prior to approval of any proposed development (clear cutting may still occur), and updates standards for single-family development.

   Mr. Burich stated the approach is to create an objective review standard based on calculating tree requirements based on 4 different yards of a lot, front, 2 sides, and rear. Linear footage of the yards will be calculated to generate a total number of trees. A tree planting credit is given to account for existing trees based on yard proximity and a 20' credit will be given for a driveway. Mr. Burich explained in order to incentivize protection and keeping of the existing, mature vegetation, the proposed ordinance allows

for an applicant to receive credit for the required number of plantings for existing trees greater than 12" diameter at breast height(DBH) and credit will be further given for any trees preserved that are greater than 16" DBH at a rate for 1 tree for every 4' DBH. Existing Developed lots planting requirements currently in place at the time of the development approval will apply.

Mr. Burich explained that the proposed ordinance will create a new section, in 9.5, specially to address clearing and grading vacant lots. A clearing a grading permit will be required when there is no active application for a development permit as required by the PDO. The requirements of the information to be provided includes a tree survey, proposed construction entrance and how the required standards will be met, with new plantings or credit fir preserving existing trees within the required buffer yards. Administrative modifications are proposed to prevent applicants from having to go before the Board of Adjustment all the time.

Alex Cameron, Senior Planner, reviewed types of administrative modifications and noted that with administrative modifications they have to be objective. Mr. Cameron shared a few examples of site plans to show how the proposed ordinance would work. Mayor Strickland asked what a tree would be defined as, as to type and size. Mayor Pro Tem Davis stated tree is defined as protected trees, 8 inches or greater, and specimen trees, 24 inches or greater. Mr. Burich stated there is preference given to certain types of trees. Mayor Pro Tem Davis asked if trees is in right-of-way get any credit. Mr. Cameron stated currently no credit is given for trees in the right-of-way. Mayor Pro Tem Davis stated she has concerns with right-of-ways trees not being included and she would possibly extend the front area to 1 tree per 20 feet. Mr. Burich stated that it could be changed to 1 in 20 feet for the front, as this ordinance was just a starting point. Councilmember Drum noted that there are administrative modifications allowed in certain cases when some one-off issues arise.

Councilmember Hogeman asked how this ordinance would apply to commercial properties. Kathy Liles, Planner, stated they didn't change the commercial standards. Councilmember Hogeman asked how this would apply to corner lots. Ms. Liles stated she would get a diagram together to show that scenario. Mayor Strickland stated that Council will continue to study this proposed ordinance and the Public Hearing will be held on March 9th at 4:30 p.m.

3. Other Work Session Business.

- Mayor Strickland stated he would like Council to discuss the Moore County Occupancy Tax. Jeff Sanborn, Village Manager, stated Aberdeen and Southern Pines retain a resolve for some type of sharing methodology. Mr. Sanborn stated they ran a couple case studies on varying methods of distribution. Mr. Sanborn noted that municipalities would have to come up with a list of acceptable expenses to spend the occupancy revenue on, that the CVB would endorse. Mayor Strickland asked if the CVB would even be allowed to give municipalities the 1% to share. Mr. Sanborn stated that the Village Attorney believes it is legal according to the language in the statute. Councilmember Drum said he is concerned with entitlements for the funding. Mr. Sanborn stated it is reasonable to expect the County Commissioner's to approve what the CVB wants, which means they will take 2% and put in a fund, in which they will control. Mr. Sanborn stated that he asked the CVB would it be possible to have participation in decision making group for tourism projects funded and they stated they are open to representation but would still maintain control.
- Council received a request from Partners in Progress to send a letter of support for the Carthage Innovation Center project to receive a grant from the Economic Development Authority. The space would be for businesses to share a collaborative space to conduct business. Council came to a consensus to send a letter of support.
- Mayor Strickland noted the joint Planning and Zoning Board and the Small Areas plans went well last week.

4. Potential Future Agenda Items.

- Councilmember Hogeman stated that there are local traffic circulation issues in the Village. She suggested using the existing traffic engineer for the Small Area Plan to look at other circulation issues outside of the focus areas. Mr. Sanborn stated that we would need to enter into a separate contact with the engineer, as they are just a subcontractor for Design Collective.

5. Motion to Adjourn.

Upon a motion by Mayor Pro Tem Davis, seconded by Councilmember Boesch, Council unanimously approved to adjourn the work session, by a vote 5-0, at 8:07 p.m.

Respectfully Submitted,

Beth Dunn,
Village Clerk

DRAFT

A videotape of this meeting is located on the Village website: www.vopnc.org

Vision: The Village of Pinehurst is a charming, vibrant community which reflects our rich history and traditions.
Mission: Promote, enhance, and sustain the quality of life for residents, businesses, and visitors.
Values: Service, Initiative, Teamwork, and Improvement

DRAFT

VILLAGE COUNCIL STATEMENT OF REASONALBLENESS AND CONSISTENCY WITH THE 2019 COMPREHENSIVE PLAN MARCH 9, 2021 PUBLIC HEARING ON

AMENDMENTS TO THE PINEHURST DEVELOPMENT ORDINANCE FOR SECTIONS:

9.5 Landscaping Requirements
9.14 Design Standards for Single Family Dwellings
(6) Tree Conservation and Newly Installed Trees and Plants
10.2 Definitions

The Village of Pinehurst Council finds that:

The 2019 Comprehensive Plan sets seven Guiding Principles which emerged to expand upon the vision of the Village, help achieve community goals and preserve and enhance the high quality of life. The Comprehensive Plan also set ten Strategic Opportunities as well as Implementation Strategies which are actionable recommendations to address the strategic opportunities.

One of the Strategic Opportunities on page 26 is to promote high quality development by updating and modernizing the Pinehurst Development Ordinance to ensure future development is of the desired character favored by Pinehurst residents.

On page 124 under Guiding Principle 3 "Places to Live" for Protect & Enhance Existing Neighborhoods; Improve Neighborhood Appearance, Implementation Strategy 3.1 states the Village should periodically evaluate standards for landscape design and planting and amend standards as necessary to meet the needs and desires of the Village.

On page 203 under Guiding Principle 7 "All things Green: Parks, Open Spaces & Natural Resources" for Protecting Pinehurst's Natural Resources; Preserve Trees states the *urban forest is an important aesthetic, economic, and environmental asset to Pinehurst. It contributes positively to the character of the Village, the health of the environment, the quality of life of residents, and the experience of visitors*. Implementation Strategy 7.6 further suggests the Village to enhance *the Tree Preservation Program and standards for tree planting and preservation in the Pinehurst Development Ordinance*.

Therefore, the Village Council finds that the proposed amendments to the Pinehurst Development Ordinance **ARE** consistent with the 2019 Comprehensive Plan and therefore **APPROVES** the amendments to the Pinehurst Development Ordinance. Achieving goals consistent with the Comprehensive Plan is deemed to be reasonable and in the best interest of the public.

DRAFT

1895

VILLAGE OF

PINEHURST

PLANNING AND INSPECTIONS DEPARTMENT STAFF REPORT

To: Planning and Zoning Board
From: Alex Cameron, Senior Planner
CC: Darryn Burich, Planning & Inspections Director
Kathy Liles, Senior Planner
Date: March 4, 2021
Subject: **Proposed Text Amendments for Sections:**
9.5 Landscaping Requirements,
9.14 Design Standards for Single Family Dwellings
(6) Tree Conservation and Newly Installed Trees and Plants
10.2 Definitions

The items highlighted in this revised report represent a change or revision to the proposed amendments following the February 11th Planning and Zoning Board meeting and Council work session on February 23rd.

Background and Approach:

The Village of Pinehurst is proposing amendments to the Pinehurst Development Ordinance (PDO) to address landscaping and planting requirements for development within the Village's zoning jurisdiction. These amendments would make changes to the landscaping requirements and standards for development as defined and outlined in the attached draft ordinance. Through vast public input and comment at public meetings as well as with the adoption of the 2019 Comprehensive Plan, the desire of the public and direction of the Comprehensive Plan is very specific. Trees represent an important part of the environmental, cultural, and historic fabric and identity of the Village of Pinehurst. The ongoing loss of the Village's mature tree canopy through urbanization, without adequate standards for replacement, has been an ongoing community concern reflected in the adopted 2019 Comprehensive Plan which states:

> *It is critically important to the character of Pinehurst that the Village maintain its tree-lined corridors and encourage the preservation of trees on both public and private property. Development standards and tree planting/re-planting programs should be evaluated to identify opportunities to further enhance tree preservation efforts in the Village.*

The most concise direction of the Comprehensive Plan lies within Implementation Strategy 7.6 which states that the Village should *enhance the tree preservation program and standards for tree planting and preservation in the Pinehurst Development Ordinance.*

Over the course of nearly two years, staff and members of the Planning & Zoning Board have been discussing potential regulatory improvements to the PDO that would enhance the current regulatory standards through increased tree planting in designated areas and fall within the grant of power from enabling legislation. Staff has now developed and is recommending a series of amendments to the PDO that will increase the development standards.

The recently adopted North Carolina General Statute Chapter 160D for planning and development regulation sets forth the local zoning grant of power (160D-702). 160D -702 states that local jurisdictions may adopt zoning regulations with certain exceptions. One of those are "building design elements". The statute continues to state that "building design elements" do NOT include "*the use of buffering or screening to minimize visual impacts, to mitigate the impacts of light and noise, or to protect the privacy of neighbors".*

The draft ordinance language addresses these concerns and covers the grant of power from the enabling legislation by clearly stating the intent of the proposed regulations in the Purpose and Scope as described in Section 9.5.1. Section 9.5 of the PDO also now includes a new Part 1 to provide the scope for landscaping requirements or number of plantings that applies to all properties in the Village's zoning jurisdiction. The existing language for landscape requirements for non-residential development remains unchanged but has been shifted to Part 2 of Section 9.5. Definitions have been added to Section 9.5 and Chapter 10 for clarity and are consistent with

recently adopted North Carolina General Statutes Chapter 160D. Section 9.14.6 has been amended to revise landscape requirements for single-family residential development.

The general approach of the proposed standards is to create buffer areas or yards around the perimeter of development. In order to create the buffer yards, a required number of trees is to be located in each of those yards (front, side and rear) as shown in the table below. In lieu of planting the required number of trees in the respective yards, an applicant may receive credit for existing, healthy trees as defined in the proposed ordinance.

Location	**Number of Required Trees**
Front Buffer Yard	1 Protected Tree Per 15 Linear Feet of Street Frontage
Side Street Buffer Yard	1 Protected Tree Per 15 Linear Feet of Street Frontage
Side Buffer Yard	1 Protected Tree Per 35 Linear Feet
Rear Buffer Yard	1 Protected Tree Per 25 Linear Feet

A new Side Street Buffer Yard and definition was created to avoid any confusion on how corner lots are reviewed and measured.

Protected trees are 8 inches DBH and greater. If the property does not contain trees of protected tree size, then trees between 3 inches and 8 inches may be used. As a last resort, trees may be planted to meet the number of required plantings in the respective yards and must meet the requirements in the table below.

Tree type	**Minimum Planting Height**	**Minimum Caliper**
Evergreen trees	6 feet	2 inch
Tall trees from Appendix F	8 feet	2 inch
Short trees from Appendix F	6 feet	1.25 inch

One challenge that emerged in proposing new regulations was how to handle existing development that was approved under previous regulations and was proposed for redevelopment or simply a request to remove existing healthy trees on the property. Staff proposes to handle this within the "*Existing Lots*" section of the proposed ordinance. If an existing lot ~~of record~~ is undergoing redevelopment of less than 50% of the floor area of the principal building ~~size~~, then the new requirements would not apply. If more than 50% of the property is proposed for development, the applicant may follow the standards that were originally approved.

Another issue was how to handle willful violations. The proposed ordinance addresses this by requiring that for every tree that is illegally removed, then 2 inches of caliper for every inch removed will be required to be replanted based on the stump size. If there is no stump, then aerial photography will be used, so that 3 three-inch trees will be planted for every tree removed. *After further review, staff suggests Council further discuss this section as well as consider alternate language stating that willful violations would just need to come into compliance according to Section and Table 9.5.1.4.*

Tree credits have been included to recognize the protection of large trees. Grouping may be used when preserving trees. Each lot will also be given credit for one 20-foot driveway. Staff is given limited flexibility to address minor administrative modifications on the placement of trees when tree credits apply, when small trees need to be used near powerline easements and if there are no existing trees within the required yards to preserve but there are trees in the nearby building footprint that could be.

The proposed draft is provided for further discussion. All proposed changes are included in the draft ordinance with deletions having a ~~strikethrough~~ and additions being <u>underlined</u>.

<u>Text Amendment Process and Planning and Zoning Board Action:</u>

The Planning and Zoning Board shall consider each proposed amendment to the development ordinance and shall make a recommendation to Village Council on the proposed amendment. In considering an amendment, the Board shall conduct a legislative public hearing on the application. After conducting the public hearing and reviewing the application, the Board will formulate a recommendation to Village Council and shall also make a statement on whether the proposed amendment is consistent with the Comprehensive Plan.

If there are more questions or concerns that the Board feels are needed to be addressed, the Board can continue the public hearing to a specific date, place and time but a recommendation to Village Council should be made within 30 days of the first scheduled public hearing before the Board.

<u>Comprehensive Plan Consistency:</u>

The 2019 Comprehensive Plan sets seven Guiding Principles which emerged to expand upon the vision of the Village, help achieve community goals and preserve and enhance the high quality of life. The Comprehensive Plan also set ten Strategic Opportunities as well as Implementation Strategies which are actionable recommendations to address the strategic opportunities.

One of the Strategic Opportunities on page 26 is to promote high quality development by updating and modernizing the Pinehurst Development Ordinance to ensure future development is of the desired character favored by Pinehurst residents.

On page 124 under Guiding Principle 3 "Places to Live" for Protect & Enhance Existing Neighborhoods; Improve Neighborhood Appearance, Implementation Strategy 3.1 states the Village should periodically evaluate standards for landscape design and planting and amend standards as necessary to meet the needs and desires of the Village.

On page 203 under Guiding Principle 7 "All things Green: Parks, Open Spaces & Natural Resources" for Protecting Pinehurst's Natural Resources; Preserve Trees states the *urban forest is an important aesthetic, economic, and environmental asset to Pinehurst. It contributes positively to the character of the Village, the health of the environment, the quality of life of residents, and the experience of visitors*. Implementation Strategy 7.6 further suggests the Village to enhance *the Tree Preservation Program and standards for tree planting and preservation in the Pinehurst Development Ordinance*.

Staff Recommendation:

Staff recommends that the Planning and Zoning Board recommend approval of the proposed amendments and adopt the statement of consistency with the Comprehensive Plan provided.

ORDINANCE #21-06

AN ORDINANCE AMENDING THE VILLAGE OF PINEHURST DEVELOPMENT ORDINANCE AS IT PERTAINS TO CHAPTER 9, DESIGN AND DEVLOPMENT STANDARDS AND PROCESSES

Whereas, development impacts adjoining uses and properties and can be impacted by adjoining uses and properties through an absence or elimination of vegetative buffering; and

Whereas, development can be impacted by the impacts from activities that occur in adjacent rights-of-way including traffic, noise, dust, and odor through and absence or elimination of vegetative buffering; and

Whereas, development impacts the overall visual character of the Village and the ETJ through the elimination or absence of vegetative buffering: and

Whereas, these regulations will help to mitigate the aforementioned development impacts through creation of vegetated tree lined buffer yards; and

Whereas, these regulations also contain provisions to incentivize the use of existing qualifying vegetation to provide buffering; and

Whereas, these regulations are consistent with Guiding Principle 1 of the 2019 Comprehensive Plan to retain the small-town charm, scale, and character of the community to ensure a high quality life; and

Whereas, these regulations are consistent with Guiding Principle 3 of the 2019 Comprehensive Plan to protect and enhance the quality and character of existing residential neighborhoods; and

Whereas, these regulations are consistent with Guiding Principle 7 of the 2019 Comprehensive Plan to preserve, conserve, and feature Pinehurst's natural resources; and

Whereas, the 2019 Comprehensive Plan was adopted by the Pinehurst Village Council on October 22, 2019 after undergoing a planning process supported by extensive and robust public participation that included residents, business owners, local interest groups, and elected and appointed officials; and

Whereas, the 2019 Comprehensive Plan is the result of thoughtful public conversations spanning over one year and represents a path forward for the Village of Pinehurst to achieve its vision.

DRAFT

NOW, THEREFORE, BE IT ORDAINED AND ESTABLISHED by the Village Council of the Village of Pinehurst, North Carolina in the regular meeting assembled on the 9th day of March, 2021, makes the following amendments to the Pinehurst Development Ordinance:

Section 1. The Village of Pinehurst Development Ordinance Chapter 9 Section 9.5 Landscaping Requirements, Section 9.14.6 Tree Conservation and Newly Installed Trees and Plants is amended as follows.

Section 9.5 Landscaping and Buffering Requirements

Part 1. General Standards

9.5.1. Purpose and Scope

The regulations of this Section are intended to create buffer yards associated with development of parcels within the Village of Pinehurst and its ETJ. Buffer yards help to moderate visual contact, create spatial separation, and minimize adverse impacts on adjacent properties resulting from development activity. Buffer yards also help to reduce the visual effects and the impacts of traffic, noise, dust, and odor as well as to protect the privacy of neighbors. The Village values its existing tree canopy and these regulations provide incentives that allow existing qualifying trees to be used as part of the buffer required by this Section. By doing so, these regulations will preserve and enhance the visual character of Village and the ETJ and lessen the impacts of the development.

9.5.1.1 Definitions.

(A) Clearing and Grading: any use of the land by any person in residential, industrial, educational, institutional, or commercial development, highway and road construction and maintenance that results in a change in the natural cover or topography.
(B) Development: Unless the context clearly indicates otherwise, the term means any of the following:
    a. The construction, erection, alteration, enlargement, renovation, substantial repair, movement to another site, or demolition of any structure.
    b. The excavation, grading, filling, clearing, or alteration of land.
    c. The subdivision of land as defined in N.C.G.S. 160D-802.
    d. The initiation or substantial change in the use of land or the intensity of use of land.
(C) Protected Trees: Any healthy living tree with a diameter breast height of eight inches or greater.
(D) Redevelopment: For the purpose of this section, redevelopment is the physical change to a parcel of land that results in the increase of the floor area of the principal building by 50% or more.
(E) Specimen tree is any healthy living tree that:
    a. Has a trunk diameter at breast height (DBH) of twenty-four (24) inches or more;
    b. A trunk DBH of twelve (12) inches or more in the case of the following species:
        i. Ilex species (holly);

ii. Magnolia species;
iii. Longleaf Pine species;

c. Is listed as a State or National Champion by the North Carolina Forest Service or the American Forestry Association;
d. Provides unique habitat for any endangered or threatened wildlife species protected by Federal law; or
e. Has been cited by the Village Council as being historically significant.

(F) Buffer Yards: for the purposes of Sections 9.5 and 9.14.6, buffer yards are defined as follows. Yard lengths are based on the most interior length of the setback line.

a. Front: the front buffer yard is equal to the depth of the front yard setback of the zoning district extended to the side property lines.
b. Rear: the rear buffer yard is equal to the depth of the rear yard setback of the zoning district extended to the side property lines.
c. Side: the side buffer yard is equal to the width of the side yard setback from where it intersects both the front and the rear yard.
d. Side Street: the side street buffer yard is equal to the width of the side street setback from where it intersects both the front and the rear yard.

DRAFT

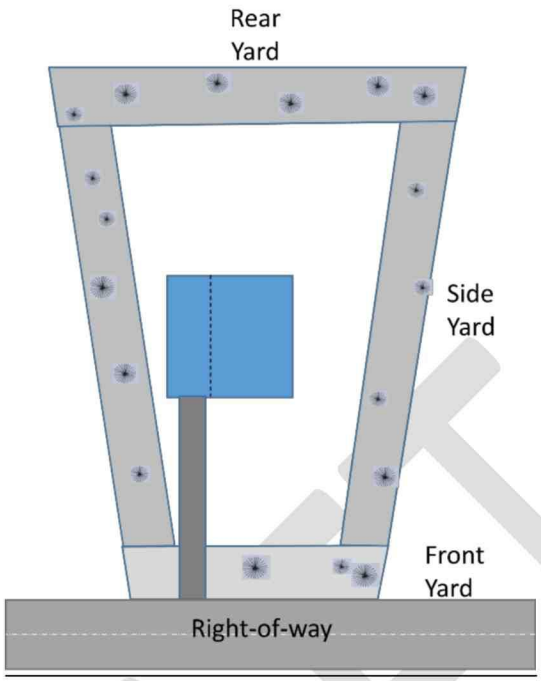

Figure 1. Standard lot yards

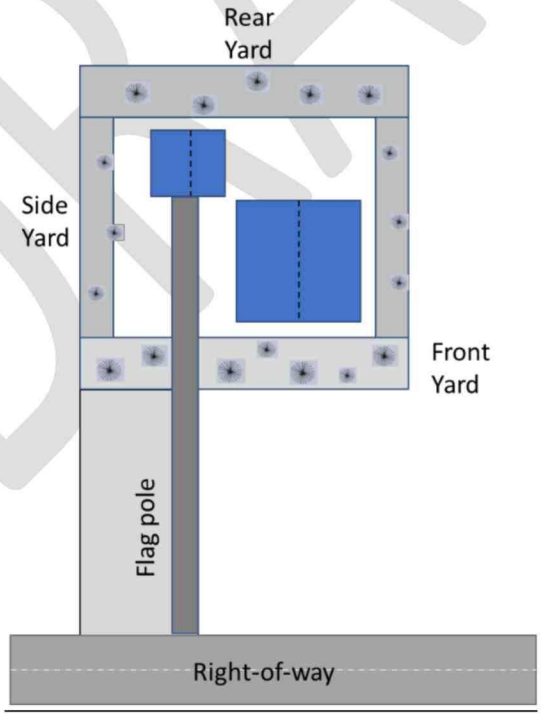

Figure 2. Flag Lot Yards

DRAFT

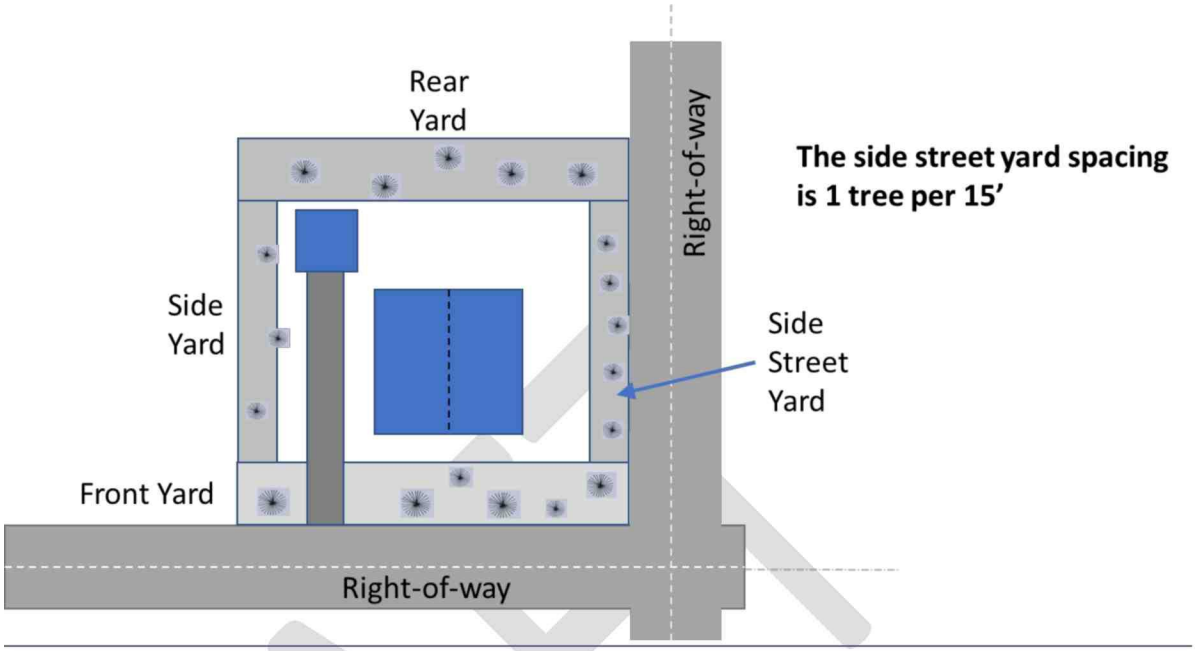

Figure 3. Side Street Buffer Yard

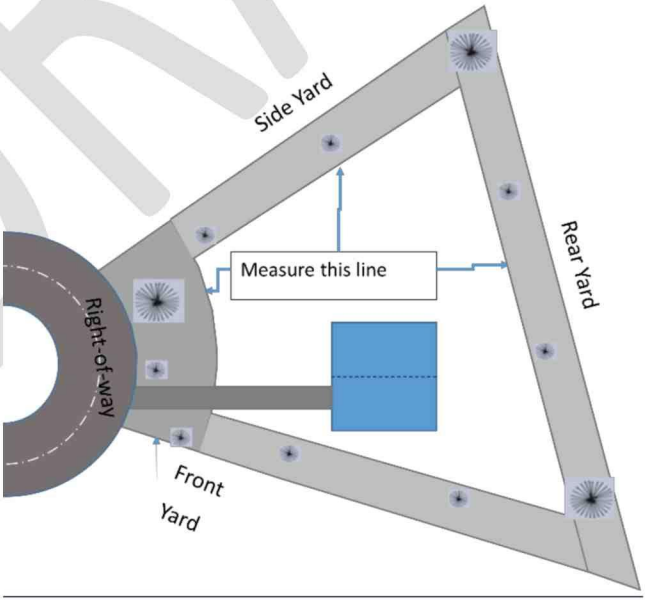

Figure 4. Where to Take Linear Measurements

DRAFT

Tree Removal: "Tree removal" shall include, but not be limited to, trees removed by clearing, damage inflicted to the root system by machinery; girdling; storage of materials and soil compaction; changing the natural grade above or below the root system or around the trunk; damage inflicted on the tree permitting fungus infection or pest infestation; paving with concrete, asphalt or other impervious material within the drip line or such proximity as to be harmful to the tree; or any act of malicious damage to a tree.

9.5.1.2 Clearing and Grading Applications and Permits

When clearing and grading activity is proposed on a vacant parcel and there is no active application for a development permit pursuant to this Ordinance (e.g. Major or Minor Site Plan, Major or Minor Subdivision, Single Family Development), a clearing and grading application must be submitted and a permit issued per the requirements of this Section.

If there is no tree survey on file for the property, then a tree survey must be prepared before any tree removal occurs unless it is subject to the exemptions listed in Section 9.5.1.6. If a landscape plan or tree survey has been prepared that is no older than five (5) years and is on file with the Village, it may be used whenever tree removal/replacement is planned.

In addition to ensuring that Village standards are met, Village staff may use clearing and grading applications as an educational tool to provide helpful insight to the developer regarding the costs of removing and replanting trees that will be required for buffering uses as well as to provide protection to specimen trees.

9.5.1.3 Tree Survey

(A) Each application for a development or clearing and grading permit shall be accompanied by a tree survey. If a clearing and grading application accompanies an application for any other development permit, the tree survey shall be of the same scale as, and superimposed on, a development site plan or preliminary plat.

(B) Trees to be surveyed include all trees greater than or equal to 8" DBH. Identification of trees smaller than 8" DBH is encouraged if the applicant determines that trees smaller than 8" DBH but larger than 3" DBH may be needed for credit. All tree surveys shall include location, number, size (DBH), qualifying trunks and species with a scaled graphic representation of each protected tree, and the trunk location shall be provided. All required tree surveys shall include the name, phone number, address, signature, and seal of a licensed surveyor, landscape architect, or civil engineer registered in the State of North Carolina. The survey shall include all trees to be protected or preserved, and those scheduled to be removed, including dead and damaged trees. Construction access shall be shown on the survey. In cases where a previously approved recorded plat is utilized for the purpose of tree survey, the name, address, phone number, signature and seal of the licensed landscape architect, civil engineer, or surveyor registered in the State of North Carolina shall be provided. A scaled infrared or high resolution black and

white aerial photograph or print of equal quality may be substituted in cases where the Village Planner determines that it would provide sufficient information from which a decision may be made. This is typically the case when large contiguous areas of preservation are proposed, and the trees will not need to be counted towards credit.

(C) Existing Lots. Existing lots are lots created by final plat prior to the effective date of this Section.

(1) If an existing lot is undeveloped as of the effective date of this section, a tree survey shall be prepared prior to clearing or development.

(2) If an existing lot is developed for single-family residential purposes and is proposed for redevelopment, additions, or modifications, a landscape plan shall be submitted consistent with the requirements of Appendix B. A tree survey is not required.

(3) If an existing lot is developed for nonresidential purposes and is proposed for redevelopment, additions, or modifications, submittal requirements shall comply with Section 9.5, Part 2 and a tree survey is not required.

(4) In the event an existing lot is damaged or destroyed due to disasters such as windstorms, ice storms, fire, or hurricanes, the requirements of this section shall not apply.

9.5.1.4 Buffer Yard Standards

(A) When a clearing and grading application is required and additional changes to the land are not proposed through a Major or Minor Site Plan or Major or Minor Subdivision, a minimum planted perimeter buffer must be preserved and or created per the Table 9.5.1.4 unless a tree preservation credit is provided as allowed under this Section.

Table 9.5.1.4

Location	Number of Required Trees
Front Buffer Yard	1 Protected Tree Per 15 Linear Feet of Street Frontage
Side Street Buffer Yard	1 Protected Tree Per 15 Linear Feet of Street Frontage
Side Buffer Yard	1 Protected Tree Per 35 Linear Feet
Rear Buffer Yard	1 Protected Tree Per 25 Linear Feet

*If a lot is a flag lot or an irregularly shaped lot, the linear feet of street frontage is based on the widest street facing dimension of the front yard.

DRAFT

The number of required trees shall be measured in whole numbers. The applicant shall round down when calculating the number of trees.

(B) Driveway Allowance

Each parcel shall be given an allowance for one 20' driveway. This shall be applied by subtracting twenty (20) feet from the linear foot calculation for number of required trees as shown in Table 9.5.1.4.

Example

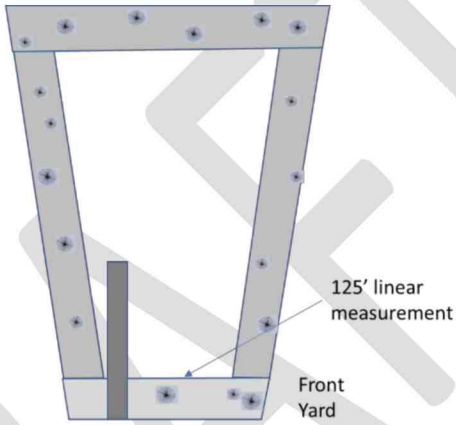

125' – 20' = 105'

105/15 = 7 trees

(C) Existing Tree Preservation Credits.

To help maintain the existing overall tree canopy and to encourage preservation of existing trees, credits may be given towards the requirements of Table 9.5.1.4 for existing preserved protected trees in the buffer yards as follows.

(1) Tree credits shall apply to the particular buffer yard in which the tree is located.
(2) One additional tree credit will be granted for every four (4) inch increase in tree girth above 12" DBH.

Example. The front tree preservation yard contains a 24" oak. Preservation of this tree grants credits in the front yard for four (4) trees.

Trees subject to the preservation credit may be grouped and are not required to meet spacing requirements in the side and rear yards. In order to ensure adequate street yard buffer and to maintain street tree canopy, trees may be grouped in the front yard; however, there shall be no space less than one tree per every 35 linear feet.

DRAFT

(D) Credit for Trees Less than 8" DBH

Credit may be provided for trees smaller than 8 inches DBH but no less than 3 inches DBH when there are insufficient trees present on the property to meet the requirements of Table 9.5.1.4.

(E) Minor Modifications for Alternate Spacing and Grouping

The Village Planner may authorize a minor modification to encourage the preservation of existing trees in lieu of planting subject to the following.

(1) To satisfy tree preservation credits described in 9.5.1.4 (C).
(2) To allow the preservation of trees within the building envelope if they are within a distance no greater than the required buffer yard depth when insufficient trees are available for preservation.

9.5.1.5 Buffer Yard Standards for Developed Lots

(A) Single-family lots undergoing redevelopment shall comply with Section 9.5.1.4(A).
(B) Single-family lots undergoing development that is less than 50% of the floor area of the principal structure shall comply with the landscape table below.

Zoning District	# of Trees per Dwelling	Size of Tree
R-5, R-8 and R-10	4	3" DBH
R-15, R-20, R-30	8	3" DBH
R-210	16	3" DBH

(C) All other lots shall comply with 9.5 Part 2.

9.5.1.6 Exemptions

(A) This Article shall not restrict public utilities and electric suppliers from maintaining safe clearance around existing utility lines, and existing easements in accordance with applicable state laws.

(B) Removal of dead or naturally fallen or severely damaged trees or vegetation, or the removal, by an approved method, or trees or vegetation that are a threat to the public health, safety, or welfare based on observation by the Village Planner or by the submittal of an arborist's report.

DRAFT

(C) Removal of trees for the purpose of conducting bona fide agricultural and forestry operations shall be exempt from the provisions of this Article. This exemption applies to forestry activity on forestland that is taxed on the basis of its present-use value as forestland under Article 12 of Chapter 105 of the North Carolina General Statutes (NCGS) and activities conducted in accordance with an approved forestry management plan subject Chapter 89B of NCGS and extends to any activity defined as a bona fide farm operation in NCGS 160D-903 within the extraterritorial jurisdiction of the Village. If an exempt timber harvest occurs as described above, the Village may withhold approval of a building permit, site plan, or subdivision plat for the site for three (3) years following the harvest and up to five (5) years if the removal is deemed willful.

(D) Properties located in the VC, PC, and VMU Zoning Districts are exempt.

(E) The North Carolina Department of Transportation (NCDOT) shall be exempt from the tree protection and preservation requirements of this Ordinance within NCDOT rights-of-way. Tree removal in the Village rights-of-way must be approved by the Village Manager or designee.

(F) All real properties owned by the Village of Pinehurst are exempt if tree removal is authorized by the Village Manager or designee.

9.5.1.7 Trees Removed In Violation

(A) Protected Trees Removed in Violation. When trees of 8 inches DBH or greater have been removed in violation of this Ordinance, replacement trees shall be planted in the same general area according to a replacement schedule approved by the Village Planner in a ratio not to exceed 2:1 of two inches of caliper per inch removed. As an example, if six 8" trees are removed, 96 inches of caliper shall be planted. No tree planted shall be smaller than 3" caliper. The size of the tree removed shall be determined from the size of the remaining base or stump or an existing tree survey on file for the property. If the size of the tree cannot be determined but its removal can be documented by photographic evidence or the use of aerials, then the violator shall replant three 3" trees for every tree removed.

Tree preservation standards are incorporated in 9.5 Part 2 Landscape Requirements for Multi-family, Commercial and Industrial projects and in 9.14.6 for Single Family Residential Use.

Section 2. Amend Section 9.5 to insert a new part and renumber the existing text.

Part 2.

Landscaping Requirements for All Development Requiring a Permit Other than Single-Family Residential and Clearing and Grading

9.5.2.1 Landscape Plan Required

A landscape plan shall be submitted to the Village Planner and its approval is a prerequisite for the issuance of a development permit where required.

9.5.2.2 Planted Buffers

(A) Permitted Uses Within Planted Buffer Areas: Planted Buffers should be left in an undisturbed natural vegetative state and provided with supplemental plantings. Selective thinning of vegetation and removal of dead vegetation may be permitted as long as the intent of the planted buffer requirement is maintained. Driveways and utilities may cross a planted buffer at or as near a perpendicular angle as practical. Paths and walkways may pass through the planted buffer and pedestrian walkways (greenways) may be installed within the buffer area. Grading in the designated planted buffer may be allowed with site plan approval, if the re-vegetation plan is determined to meet the intent of this Section;

(B) Location of Planted Buffers: Required planted buffers shall be provided along the perimeter of development unless alternate locations are approved. Planted buffers shall be designated and dimensioned on all site plans and subdivisions plans, where applicable;

(C) Public Pedestrian Easement Required: The full width of all buffer areas shall be designated as a public pedestrian easement and shown on a recorded plat;

(D) Application:

(1) These standards apply to all non-residential and multi-family uses (including townhouse unit development) located within the Village of Pinehurst and its extraterritorial jurisdiction except for properties containing only museums and/or libraries as the primary use and located within the PC zoning district. Additionally, the Village Council may waive some or all of these standards for developments and uses located within the VC, VMU, VCP and VR Zoning Districts when determined to be in the best interest of the public. In waiving these standards, the Village Council may require an alternate means of buffering if agreed upon by the property owner. When nonresidential and multi-family uses submit a site plan for locations next to property zoned for primarily residential use, planted buffers shall be provided near the perimeter of the nonresidential or multi-family property. One half of the planted buffers requirements shall apply when a public street or railroad right-of-way separates a nonresidential or multi-family uses from a residential property. If a greenway passes through a landscape buffer the area of the greenway shall be subtracted from the total buffer area for plant count purposes.

(2) The required planted buffer width is based on the classification shown on Table 9.5.2.2;

(3) If said project is adjacent to property that is zoned non-residential or multi-family but is used for single family purposes, half the required planted buffer width along the perimeter of the property adjoining that property shall be required;

(4) A class 3 planted buffer shall be installed along and adjacent to NC 2, Midland Road east of the Traffic Circle to the zoning jurisdictional boundary of Pinehurst, on the west side of Hwy. 15/501 from the northern extent of the zoning jurisdictional boundary of Pinehurst southward to the western extent of the traffic circle and the intersection with Hwy. 211, Hwy. 211 from the intersection of Mckenzie Rd. to the western extent of the zoning jurisdictional boundary of Pinehurst, Murdocksville Rd. from the intersection of Hwy. 211 to the northern extent of the zoning jurisdictional boundary of Pinehurst and on the west side of Hwy 5 from the intersection of Lake Hills Rd. south to the intersection with Trotter Hills for all non-single family residential uses.

(5) If the adjacent property is zoned for residential use but is vacant at the time of the proposed development, the full required planted buffer width shall be provided;

(6) If the proposed development is non-residential and the adjacent property is zoned or used for multi-family dwellings, one-half of the planted buffer width shall be provided, but not less than ten (10) feet;

(7) If the proposed development is for multi-family dwellings adjacent to property zoned or used for multi-family dwellings, one-half of the planted buffer width shall be provided, whether the property is occupied or not.

(E) Planted Buffer Classifications and Width:

(1) Planted buffer width is based on uses in the following classifications:

(a) Class 1 - 10 feet: Cemeteries, golf courses, passive recreational areas, and;

(b) Class 2 - 20 feet: Offices, churches, schools, public facilities including playgrounds, ball fields, community swimming pools, and similar facilities, day care facilities, multi-family, residential, hotels;

(c) Class 3 - 30 feet: Neighborhood commercial and service activities including, but not limited to, retail operations, funeral homes, restaurants, banks, convenience stores;

(d) Class 4 - 50 feet: Commercial activities with higher vehicle activities including, but not limited to, vehicle repair, theatres, outdoor recreation centers, and outdoor storage

Table 9.5.2.2

REQUIRED PLANTED BUFFER WIDTH IN FEET BASED ON BUFFER CLASSIFICATION AND ADJACENT PROPERTY USE AND ZONE				
ADJACENT PROPERTY USE AND ZONE				
Planted Buffer Class	Developed Residential Zone	Principal Residential Use in Nonresidential Zone	Developed Multi-Family Zone	Vacant Multi-Family Zone
Class 1	10 feet	10 feet	10 feet	10 feet
Class 2	20 feet	20 feet	10 feet	10 feet
Class 3	30 feet	30 feet	15 feet	15 feet
Class 4	50 feet	50 feet	25 feet	25 feet

(2) The required setbacks may be used to meet landscape planted buffer width requirements in all districts. When planted buffers are required for residential uses, the planted buffer requirements shall be designated open space, or common area;

(3) Planted buffer widths and required plantings may be reduced by thirty percent (30%) if the site plan indicates berming, alternate landscaping, walls, opaque fencing in combination with landscaping or topographic features which will, in the opinion of the Village Planner, achieve the intent of this Section as outlined in Section 9.5.1 and result in equal or better performance. In no case shall a buffer width be less than ten (10) feet. Berms may not have a slope steeper than two (2) horizontal to one (1) vertical and must have a crown width of at least two (2) feet and a minimum height of two (2) feet;

(F) Requirements for Planted Buffer Areas:

(1) Existing Vegetation. Existing vegetation, regardless of species, shall be used to meet all or part of the requirements of this Section wherever possible, if it provides the same level of obscurity as the planted buffer required below. Vegetation to be saved shall be identified on site plans, along with protection measures to be used during grading and construction. (See Section 9.5.2.7 for protection measures and calculation of credits for existing trees);

(2) Planting requirements: Planting requirements for planted buffers include both trees (large and small) and shrubs as described below. (See Appendix F for a listing of native/water conserving trees and shrubs.) In calculating buffer planting requirements, areas of driveways are excluded;

(a) Tree Standards: This requirement may be satisfied as follows:

1. One longleaf pine tree with a minimum size of three (3) inch caliper at planting are required per two hundred (200) square feet of buffer area.

2. Two Understory trees a minimum of two-inch caliper are required per five hundred (500) square feet of buffer area, one of which is to be an evergreen species that is not a pine tree.

3. Trees shall be distributed along the entire length and width of the planted buffer. Due to unique characteristics of a site, or design objectives, alternative plant mixes and spacing may be approved by the Village Planner.

(b) Shrub Standards: Shrubs, a minimum of twenty-four (24) inches in height, of a variety that can be expected to reach four (4) to five (5) feet in height and three (3) feet in width within three (3) years of planting, shall be provided. Shrubs shall not be planted closer than six (6) feet to newly planted trees, nor within the drip line of existing hardwood trees. Shrubs shall be distributed along the entire length and width of the planted buffer, preferably in naturalistic groupings so as not to create a hedge-like condition. Shrubs shall be provided at one per seventy-five (75) square feet of buffer area.

9.5.2.3 Landscape Screens

(A) The purpose of a screen is to use plants and/or other landscape or architectural elements to obscure views from all corridors or adjacent properties.

Structures such as loading docks, mini-warehouses, service courts, dumpster areas, mechanical equipment, and outside storage of material stocks or equipment, either for sale or not for sale on the premises, such as, but not limited to, motor vehicles, equipment, or construction equipment shall be screened from unobstructed off-site views. Uses requiring screening as noted in this Ordinance shall be screened according to the requirements of this Section. This screening requirement does not pertain to outdoor display of merchandise located within the Historic Preservation Overlay District that complies with the regulations and design guidelines of that district.

(1) Landscape Screen Standards: Features and uses specified above and/or others requiring screens shall provide a visual obstruction from all corridor and adjacent properties in conformance with the following standards: The screen may be composed of view-obscuring vegetation, wall, fence, or berm. The items may be used individually or in combination. The minimum result shall be a semi- opaque seventy-five percent (75%) screen that obscures views from the ground to a height of the object being screened. Evergreen screening plants shall be at least five (5) feet tall at the time of installation and reach the desired height within three (3) years of planting. Additionally, screen areas shall be sufficient size to allow for the mature growth of plant materials when used.

9.5.2.4 Parking Area Landscaping

(A) Purpose: In order to reduce reflected sunlight and headlight glare from parked vehicles, as well as to maintain a separation between vehicles and other uses and to reduce the effects on the environment of vehicle parking facilities, the following standards apply;

(B) Required Perimeter Landscape Plants:

(1) Large trees (unless subject to overhead power lines): Longleaf pines shall be planted at the rate of one three (3) inch caliper tree per twenty (20) linear feet of property line abutting a street and/or adjoining property, less driveways and sight distance triangles. Trees must be a minimum of five (5) feet and a maximum of twenty (20) feet from the parking lot edge to meet this requirement.

Credit given for existing, healthy, protected trees, regardless of species, shall be according to 9.5.2.7 of this Section;

(2) Evergreen shrubs at the rate of one (1) 24-inch height minimum shrub per three (3) linear feet of parking lot edge abutting streets and adjoining property, less driveways, of a species expected to reach a minimum height of 36 inches and a minimum spread of thirty (30) inches within three (3) years of planting. This rate may be varied based upon size of installed plant materials. Shrubs must be a minimum of five (5) feet and a maximum of ten (10) feet from the parking lot edge to meet this requirement.

Shrubs shall be planted such that no less than seventy-five percent (75%) of the length of the parking lot edge, to a height of thirty-six (36) inches, is obscured from view after three (3) years of growth. Shrubs planted within sight distance triangles shall be of a type with a maximum mature height of eighteen (18) inches.

Additionally, shrubs shall not be planted within six (6) feet of the trunk of a tree;

(3) A brick or stone wall, or fence, at least thirty-six (36) inches tall and of a material compatible with the building, may be substituted for the requirements of shrubs.

(4) Berms may be installed within the highway (front) or interior (side or rear) yards with a minimum two (2) foot height, two (2) foot minimum crown width, and side slopes of not steeper than two horizontal to one vertical. Berms shall be planted with live vegetation, and may be used with smaller plants to meet the required screening area, provided that the combination of the berm and the shrubs obscures no less than seventy-five percent (75%) of the length of the parking area, to a minimum height of thirty-six (36) inches after three (3) years of growth;

(5) Areas used for vehicle sales and/or service, parking, and business transactions such as areas adjacent to gasoline pumps (even if under a canopy) and areas for drive-up service, shall be considered parking areas and shall comply with the requirements of this Section.

(C) Landscaping Within Parking Areas:

(1) Location: Parking areas shall provide and maintain landscaped areas based upon the parking area. Areas under canopies, loading and service areas, and portions of drives with no parking on either side for a distance longer than twenty-five (25) feet and/or used exclusively as access to loading or service areas, are exempt from this requirement. The landscaping within parking areas shall be provided in addition to planted buffer requirements of this Ordinance.

Areas used for landscaping shall be provided in the amount equivalent to at least ten (10) percent of the parking area, and shall be used for planting either trees and/or shrubs according to the requirements below. Tree planting areas shall be located such that no parking space is farther than seventy-five (75) feet from a tree trunk.

(2) Required Landscape Plants: Trees shall be used at the following rates, either in combinations of small and large trees, or with large trees only, to add up to the required landscape area:

(a) One three (3) inch caliper, large hardwood or pine tree per two hundred fifty (250) square feet of required landscaped area. Each large tree shall be located within a minimum growing area of two hundred fifty (250) square feet un-encroached upon by shrubs or impervious pavement, with a minimum dimension of ten (10) feet;

(b) One understory tree less than three (3) inch caliper at the rate of one eight (8) foot tall tree per one hundred twenty-five (125) square feet of required landscaped area. Understory and evergreen trees shall be located within a minimum growing area of one hundred twenty-five (125) square feet, with a minimum dimension of seven and one half (7½) feet, un-encroached upon by shrubs or impervious pavement. Understory trees may be used to fulfill up to one third (1/3) of the required trees.

(3) Islands and Medians:

(a) Minimum curb radii of five (5) feet are required on the corners of all tree islands and medians to allow for free movement of motor vehicles around planting materials. (See the Village of Pinehurst Engineering Standards and Specifications Manual). All islands shall have raised curbing around them meeting the Village of Pinehurst Engineering Standards and Specifications Manual to further protect plants from being run over by motor vehicles. Medians without curbing shall include devices to stop vehicles from driving into the planted areas;

(b) No more than one tree may be provided per island, unless there is at least the minimum growing area per tree as required above. Large trees shall not normally be planted less than eighteen (18) feet apart, and small trees/large shrubs shall not normally be planted less than twelve (12) feet apart.

(4) Existing Trees:

(a) Credit given for existing, healthy, protected trees shall be according to 9.5.2.7 of this Section. Trees used to meet other requirements of this Ordinance may not be used to meet the requirements of this Section.

(5) Sight Distances: Trees and shrubs shall be either pruned or located to facilitate safe sight distances within parking lots.

(D) Parking Area Landscaped Yards: Any new or expanded off-street parking areas shall provide landscaped areas meeting the requirements below:

(1) New or expanded parking areas shall provide a landscaped area, adjacent to and outside of the street right-of-way, and/or adjacent residential property line edge, less driveways, of a minimum of ten (10) feet in width and adjacent non-residential property line edge, less driveways, of a minimum of five (5) feet. Proposed locations of plants and parking spaces shall be arranged to protect plants from vehicles;

(2) Planted buffers and/or screens provided adjacent to right-of-way, as required under Sections 9.5.2.2 and/or 9.5.2.3 of this Section, and located between parking lots and streets and/or adjoining residential property may be considered in fulfilling these requirements.

(E) Street Trees Required

(1) For all non single-family developments one three (3) inch caliper, large hardwood or pine tree per forty (40) lineal feet of street frontage minus driveways shall be planted in the road right of way. These street trees shall be approved by the Village Engineer as being acceptable street trees. These trees shall be planted outside of site triangles and not conflict with any utilities.

Alternate type and size trees may be approved by the village engineer based on existing site conditions and constraints.

9.5.2.5 Maintenance Responsibility

Unless otherwise stated, the owner of any property where landscaping is required shall be responsible for the maintenance of all required plant material and continued compliance with this Section.

9.5.2.6 Request for Extension of Compliance

(A) A letter of request for extension of compliance with landscaping requirements may be filed with the Village Planner that states the reasons why the request is being made. If the Village Planner finds that there are unfavorable conditions for planting, an extension of compliance with landscaping requirements may be allowed for a period not longer than ninety (90) days. The letter shall also acknowledge that the property owner is aware of all landscaping and screening requirements, and will comply with those requirements within ninety (90) days, or discontinue use of the property;

(B) If an extension is allowed by the Village Planner, the applicant shall provide to the village a financial guarantee as set forth in Section 9.17.1.26 sufficient to cover one hundred twenty-five percent (125%) of the installed landscaping costs;

(C) If the initial letter of request for extension of compliance with landscaping requirements has expired and conditions are still deemed unsuitable for planting, the applicant may request one (1) additional extension of up to ninety (90) days. Failure to comply with the provisions of this Section within the time noted in the letter of request for the extension of compliance with landscaping requirements shall be deemed a violation of this Ordinance. In addition, failure to perform in accordance with this Section shall result in default and the forfeiture of the financial guarantee as set forth in Section 9.17.1.26.

9.5.2.7 Existing Vegetation Credits

(A) Existing healthy trees and shrubs shall be retained when possible and may be credited toward landscape requirements. Vegetation to be saved shall be identified on submitted plans. Protection measures shall be installed to maintain tree health and such protective measures shall be shown on the submitted plan.

(B) Credit given for existing, healthy, protected trees shall be on a tree-for-tree basis, for planted buffer areas, and on the basis of fulfilling the requirements for parking areas. Existing trees will not be allowed to be counted towards landscape screen requirements. Trees so credited must be at least three (3) inch caliper.

9.5.2.8 Specimen Trees

(A) Specimen trees include all of the following:

A specimen tree is any healthy living tree that:

(1) Has a trunk diameter at breast height (DBH) of twenty-four (24) inches or more;

(2) A trunk DBH of twelve (12) inches or more in the case of the following species:

(a) Ilex species (holly);

(b) Magnolia species;

(c) Longleaf Pine species;

(3) Is listed as a State or National Champion by the North Carolina Forest Service or the American Forestry Association;

(4) Provides unique habitat for any endangered or threatened wildlife species protected by Federal law; or

(5) Has been cited by the Village Council as being historically significant.

9.5.2.9 Preservation and Removal on Private Property

(A) Specimen Trees On Private Land:

(1) Specimen trees shall be shown on all preliminary commercial and residential site plans submittals and located by survey on final site or Landscape Protection Plans. The Village Planner may visit the site to determine the accuracy of identification. The location and identification of specimen trees shall be required if such trees are within one hundred (100) feet of areas of a development site where soil disturbance or construction activity is proposed;

(2) Proposed development shall be designed to maximize the preservation of specimen trees. Where specimen trees exist, flexible approaches such as adjustments to lot layout, placement of buildings and paved surfaces and location of utilities shall be pursued in order to save them;

(3) Notwithstanding any provision of this Ordinance to the contrary, saving of a specimen tree shall constitute evidence that the requirements for a case have been met for a variance application;

(4) No soil disturbance from construction, trenching or grading, or paving, or storage of equipment or materials shall take place within the critical root zone of any specimen tree to be preserved unless during the review of the site and/or Landscape Protection Plan it is determined there is no reasonable way the property can be developed without such disturbance.

(B) Voluntary Protection Of Specimen Trees On Existing Residential Lots:

(1) Specimen trees which are located on individual lots with single homes shall be protected if voluntarily registered by the property owner;

(2) Registration of such trees shall render the owner of the lot the following privileges: If a permitted accessory structure or addition to a house is being planned, notwithstanding any provision of the Ordinance to the contrary, saving of a specimen tree may constitute evidence that requirements for a case have been met for a variance application.

9.5.2.10 Undisturbed Buffers Along Streams, Wetlands, and Water Bodies

(A) Notwithstanding any other provisions of this Ordinance regarding buffers, landscaping or setbacks, all development, other than development of existing single family lots shall maintain a thirty (30) foot undisturbed buffer measured from the top of the bank along all streams that are shown as "blue lines" on the most recent versions of U.S. Geologic Survey 1:24,000 scale topographical maps; along the edge of identified wetlands as established by the North Carolina Department of Environmental Resources as defined by N.C.G.S. §143.212(6); and along the edge of the full pond of any water body that is fed by or connected to a "blue-line" stream, other setbacks such as wetland and watershed (Section 8.3.3) may also apply;

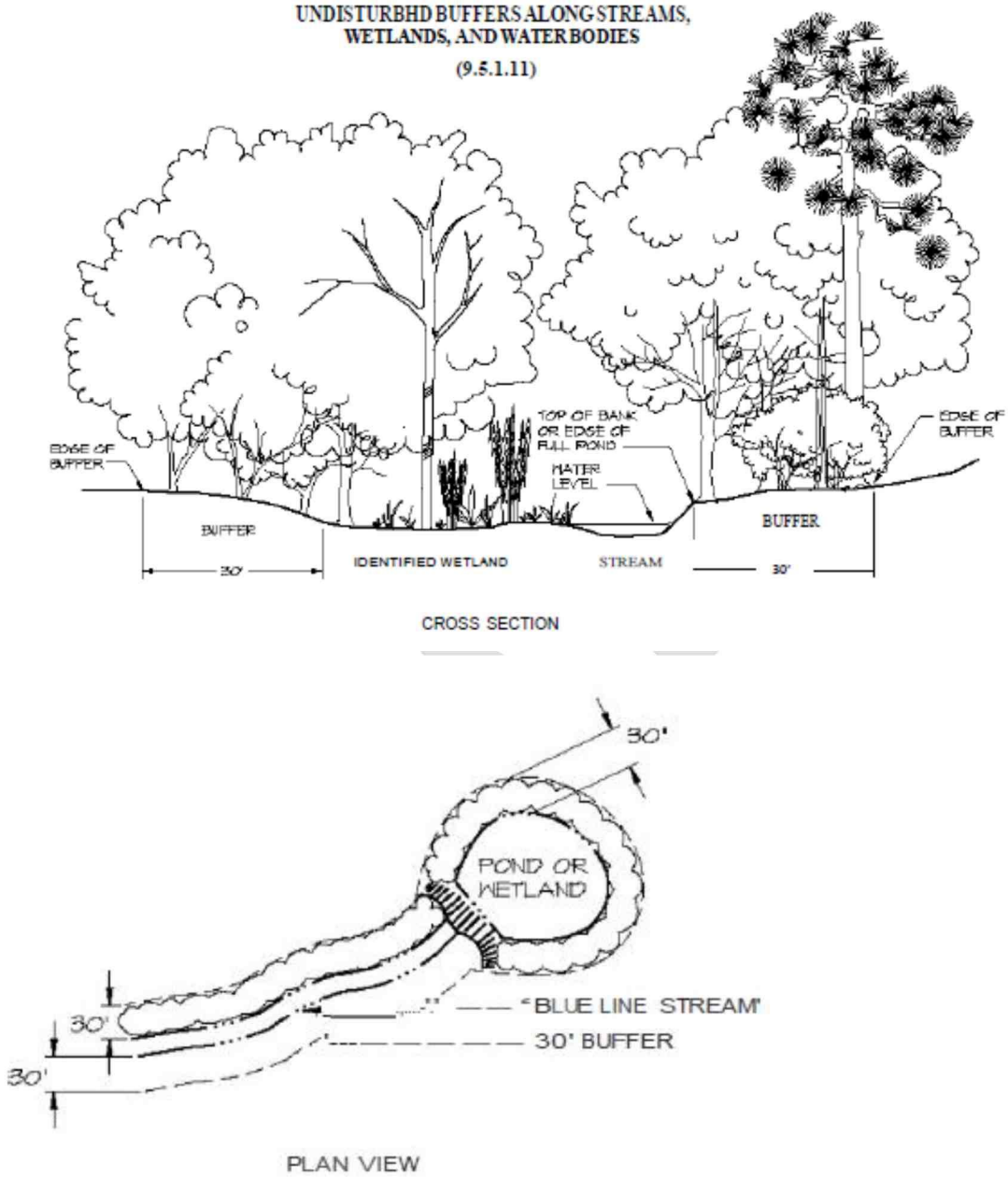

(B) The Village Council may permit as a special exception water dependent structures, pedestrian facilities and other similar structures where the Council finds that only minimal disturbance will result. In permitting such facilities, the Council may attach such reasonable conditions as the Council deems appropriate.

Section 3. Amend Chapter 10 of the Pinehurst Development Ordinance to replace the definition of "development" and alphabetically insert the following additional definitions.

Clearing and Grading: Any use of the land by any person in residential, industrial, educational, institutional, or commercial development, highway and road construction and maintenance that results in a change in the natural cover or topography.

Development: Unless the context clearly indicates otherwise, the term means any of the following:

a. The construction, erection, alteration, enlargement, renovation, substantial repair, movement to another site, or demolition of any structure.
b. The excavation, grading, filling, clearing, or alteration of land.
c. The subdivision of land as defined in N.C.G.S. 160D-802.
d. The initiation or substantial change in the use of land or the intensity of use of land.

Protected Trees: Any tree with a diameter breast height of eight inches or greater.

Redevelopment: For the purpose of Section 9.5, redevelopment is the physical change to a parcel of land that results in the increase of the floor area of the principal building by 50% or more.

Specimen tree is any healthy living tree that:

a. Has a trunk diameter at breast height (DBH) of twenty-four (24) inches or more;
b. A trunk DBH of twelve (12) inches or more in the case of the following species:
    i. Ilex species (holly);
    ii. Magnolia species;
    iii. Longleaf Pine species;
c. Is listed as a State or National Champion by the North Carolina Forest Service or the American Forestry Association;
d. Provides unique habitat for any endangered or threatened wildlife species protected by Federal law; or
e. Has been cited by the Village Council as being historically significant.

Buffer Yards: for the purposes of Sections 9.5 and 9.14.6, buffer yards are defined as follows. Yard lengths are based on the most interior length of the setback line.

a. Front: the front buffer yard is equal to the depth of the front yard setback of the zoning district extended to the side property lines.
b. Rear: the rear buffer yard is equal to the depth of the rear yard setback of the zoning district extended to the side property lines.
c. Side: the side buffer yard is equal to the width of the side yard setback from where it intersects both the front and the rear yard.
d. Side Street: the side street buffer yard is equal to the width of the side street setback from where it intersects both the front and rear yard.

Section 4. The Village of Pinehurst Development Ordinance Chapter 9, Section 9.14.6 Tree Conservation and Newly Installed Trees and Plants is amended as follows.

General Intent. The regulations of this Section are intended to preserve trees along the outer perimeter of development sites such that buffer yards are retained/created to buffer uses from adjacent properties and to reduce visual effects and the impacts of traffic, noise, dust, and odor. Where buffer yards do not exist or have been previously cleared, the planting requirements of this section apply.

(A) All development, including clearing and grading activities, shall consider conservation of existing specimen and protected trees. Where such trees exist, flexible approaches such as adjustment to placement of buildings and paved surfaces and location of utilities may be permitted by the Village Planner to preserve them. The conservation of existing trees that do not conflict with the placement of buildings, drives, walks, patios, or other site amenities is encouraged. A tree survey shall be submitted with an application for development approval that identifies all protected, heritage and specimen trees in accordance with Section 9.5. Part 1.

(B) Buffer Yard Standards

(1) A minimum planted perimeter buffer must be planted or preserved per the requirements of Table 9.14.6 below which establishes the minimum number of trees per buffer yard within an individual lot or parcel. If a buffer yard does not contain enough qualifying trees per Table 9.14.6, then the required number of trees shall be installed per the requirements of 9.14.6 (C). Tree preservation credits may be provided per Section 9.14.6 (B) (2). Buffer Yards are as defined in Section 9.5.1.1 (F)

Table 9.14.6

Setback Location	Quantity	Spacing for Planted Trees
Front Buffer Yard	1 Protected Tree Per 15 Linear Feet of Street Frontage	7.5' on center
Side Street Buffer Yard	1 Protected Tree Per 15 Linear Feet of Street Frontage	7.5' on center
Side Buffer Yard	1 Protected Tree Per 35 Linear Feet	17.5' on center
Rear Buffer Yard	1 Protected Tree Per 25 Linear Feet	12.5' on center

*If a lot is a flag lot or an irregularly shaped lot, the linear feet of street frontage is based on the widest street facing dimension of the front yard.

(2) Tree Preservation Credits.

Tree preservation credits shall be in accordance with 9.5.1.4. (C) and (D).

(3) Driveway Credit.

Driveway credit shall be in accordance with Section 9.5.1.4 (B).

(C) Tree Placement and Planting.

(1) Planted trees shall be evenly spaced within required yards and may be staggered in alignment throughout the length of the required buffer yard based on the spacing in Table 9.14.6 unless otherwise provided in this ordinance.
(2) At least one-half of the planted trees shall be Longleaf Pines. The remaining trees shall be selected from Appendix F of the Pinehurst Development Ordinance. Tall trees shall be used in the front protected yard; however, short trees may be used under power line easements. Tall or short trees may be used in the side and rear yards. Substitutions may be allowed by the Village Planner that will result in equal or better performance.
(3) Landscaping should be of sufficient size so that mature appearance will be achieved within five (5) years of installation of trees.

Planted Tree Minimum Size

Tree type	Minimum Planting Height	Minimum Caliper
Evergreen trees	6 feet	2 inch
Tall trees from Appendix F	8 feet	2 inch
Short trees from Appendix F	6 feet	1.25 inch

(4) The Village Planner may authorize a minor modification to encourage the preservation of existing trees in lieu of planting subject to the following.
   a. To satisfy tree preservation credits described in 9.5.1.4 (C).
   b. To allow the preservation of trees within the building envelope if they are within a distance no greater than the required buffer yard depth when insufficient trees are available for preservation.
   c. Small trees as identified in Appendix C may be used to avoid conflicts with overhead infrastructure.

(D) Protected Trees Removed in Violation. When trees of 8 inches DBH or greater have been removed in violation of this Ordinance, replacement trees shall be planted in the same general area according to a replacement schedule approved by the Village Planner in a ratio not to exceed 2:1 of two inches of caliper per inch removed. As an example, if six 8" trees are removed, 96 inches of caliper shall be planted. No tree planted shall be smaller than 3" caliper. The size of the tree removed shall be determined from the size of the remaining base or stump or an existing tree survey on file for the property. If the size of the tree cannot be determined but its removal can be documented by photographic evidence or the use of aerial photography, then the violator shall replant three 3" caliper trees for every tree removed.

DRAFT

(E) Unless otherwise stated, the owner of any property where landscaping is required shall be responsible for the continual maintenance of all required plant material and continued compliance with this Section. This requirement shall run with the property and shall be binding upon all future property owners.

(F) As part of the required single-family site plan the approximate location, size and type of trees to be used to meet this standard shall be shown.

G) All trees used to meet the intent of this section shall be healthy and well protected during construction. See Appendix F for a listing of trees which are known to be adaptive and naturalized in the Sandhills of North Carolina. Any of these trees can be used in meeting the tree conservation standards of this section.

(H) HVAC units, pool equipment, well houses, and other structures on the property shall be screened with landscaping material or fencing so as to be seventy-five percent (75%) opaque.

(I) Foundation Plantings Required: Foundation plantings shall be provided for all principal and accessory buildings and structures, including storage sheds. The number of plants or plant groupings shall be provided based on the linear footage of foundation along the front and sides of each structure minus doorways, and steps at a rate of one (1) shrub or plant grouping per six (6) linear foot of foundation. A minimum of fifty percent (50%) of the required plantings shall be five (5) gallon or larger at the time of planting, the remainder shall be a minimum of three (3) gallon in size. Said plantings are not required to be placed in a uniform, linear arrangement when installed and plant groupings or ground cover beds may be used to meet the intent of this section.

(J) The site shall be designed to minimize the removal of mature specimen trees, for example, Longleaf Pine, Dogwood, American Holly and Southern Magnolia.

SECTION 5. That this Ordinance shall be and remain in full force and effect from and after the date of its adoption.

VILLAGE OF PINEHURST
VILLAGE COUNCIL

(Municipal Seal)

By: _____
John C. Strickland, Mayor

Attest:

_____
Kelly Chance, Village Clerk

Approved as to Form:

_____
Michael J. Newman, Village Attorney

DRAFT