Incident IBR Reported Offenses Month To Month Comparison

Pinehurst Police Department

November 2016 - November 2015

Part I Offenses	November 2015	November 2016	+/-	Percent Changed	Year-To-Date 2015	Year-To-Date 2016	+/-	Percent Changed
Murder	0	0	0	0%	0	1	1	-
Rape	0	0	0	0%	1	0	-1	-100%
Robbery	0	2	2	-	1	2	1	100%
Commercial	0	1	1	-	0	1	1	-
Individual	0	1	1	-	1	1	0	0%
Assault	1	0	-1	-100%	6	1	-5	-83%
Violent Total:	**1**	**2**	**1**	**100%**	**8**	**4**	**-4**	**-50%**
Burglary	0	0	0	0%	1	0	-1	-100%
Residential	0	0	0	0%	1	0	-1	-100%
Non-Residential	0	0	0	0%	0	0	0	0%
Commercial	0	0	0	0%	0	0	0	0%
Other	0	0	0	0%	0	0	0	0%
Larceny	3	9	6	200%	85	80	-5	-6%
Auto Theft	0	1	1	-	1	2	1	100%
Arson	0	0	0	0%	0	0	0	0%
Property Total:	**3**	**10**	**7**	**233%**	**87**	**82**	**-5**	**-6%**
Part I Total:	**4**	**12**	**8**	**200%**	**95**	**86**	**-9**	**-9%**

Part II Offenses	November 2015	November 2016	+/-	Percent Changed	Year-To-Date 2015	Year-To-Date 2016	+/-	Percent Changed
Drug	19	25	6	32%	74	180	106	143%
Assault Simple	1	2	1	100%	9	12	3	33%
Forgery/Counterfeit	0	0	0	0%	2	4	2	100%
Fraud	1	4	3	300%	42	27	-15	-36%
Embezzlement	0	0	0	0%	0	1	1	-
Stolen Property	0	1	1	-	9	7	-2	-22%
Vandalism	4	3	-1	-25%	26	32	6	23%
Weapons	2	0	-2	-100%	4	3	-1	-25%
Prostitution	0	0	0	0%	0	0	0	0%
All Other Sex Offenses	0	0	0	0%	0	1	1	-
Gambling	0	0	0	0%	0	0	0	0%
Offenses Against Family/Children	0	0	0	0%	4	2	-2	-50%
D.W.I.	0	5	5	-	7	9	2	29%
Liquor Law Violation	1	0	-1	-100%	4	4	0	0%
Disorderly Conduct	0	0	0	0%	3	4	1	33%
Obscenity	0	0	0	0%	0	0	0	0%
Kidnap	0	0	0	0%	0	0	0	0%
All Other Offenses	7	27	20	286%	154	182	28	18%
Part II Total:	**35**	**67**	**32**	**91%**	**338**	**468**	**130**	**38%**
Incident Total:	**39**	**79**	**40**	**103%**	**433**	**554**	**121**	**28%**

Arrest IBR Reported Offenses Month To Month Comparison

Pinehurst Police Department

November 2016 - November 2015

Part I Offenses	November 2015	November 2016	+/-	Percent Changed	Year-To-Date 2015	Year-To-Date 2016	+/-	Percent Changed
Murder	0	0	0	0%	1	0	-1	-100%
Rape	0	0	0	0%	0	0	0	0%
Robbery	0	0	0	0%	0	0	0	0%
Commercial	0	0	0	0%	0	0	0	0%
Individual	0	0	0	0%	0	0	0	0%
Assault	1	0	-1	-100%	5	0	-5	-100%
Violent Total:	**1**	**0**	**-1**	**-100%**	**6**	**0**	**-6**	**-100%**
Burglary	1	0	-1	-100%	1	0	-1	-100%
Residential	0	0	0	0%	0	0	0	0%
Non-Residential	0	0	0	0%	0	0	0	0%
Commercial	0	0	0	0%	0	0	0	0%
Other	0	0	0	0%	0	0	0	0%
Larceny	3	4	1	33%	25	17	-8	-32%
Auto Theft	0	0	0	0%	1	0	-1	-100%
Arson	0	0	0	0%	0	0	0	0%
Property Total:	**4**	**4**	**0**	**0%**	**27**	**17**	**-10**	**-37%**
Part I Total:	**5**	**4**	**-1**	**-20%**	**33**	**17**	**-16**	**-48%**

Part II Offenses	November 2015	November 2016	+/-	Percent Changed	Year-To-Date 2015	Year-To-Date 2016	+/-	Percent Changed
Drug	11	24	13	118%	70	186	116	166%
Assault Simple	1	1	0	0%	12	17	5	42%
Forgery/Counterfeit	0	0	0	0%	0	2	2	-
Fraud	0	0	0	0%	11	9	-2	-18%
Embezzlement	0	0	0	0%	1	0	-1	-100%
Stolen Property	1	1	0	0%	14	9	-5	-36%
Vandalism	2	0	-2	-100%	10	4	-6	-60%
Weapons	0	0	0	0%	1	9	8	800%
Prostitution	0	0	0	0%	0	0	0	0%
All Other Sex Offenses	0	0	0	0%	0	2	2	-
Gambling	0	0	0	0%	0	0	0	0%
Offenses Against Family/Children	0	0	0	0%	3	3	0	0%
D.W.I.	5	6	1	20%	65	78	13	20%
Liquor Law Violation	2	0	-2	-100%	10	11	1	10%
Disorderly Conduct	0	0	0	0%	5	3	-2	-40%
Obscenity	0	0	0	0%	0	0	0	0%
Kidnap	0	0	0	0%	0	1	1	-
All Other Offenses	31	17	-14	-45%	279	271	-8	-3%
Part II Total:	**53**	**49**	**-4**	**-8%**	**481**	**605**	**124**	**26%**
Arrest Total:	**58**	**53**	**-5**	**-9%**	**514**	**622**	**108**	**21%**

SUMMARY FOR THE MONTH OF NOVEMBER 2016

SUMMARY OF INCIDENT CALLS

TYPE OF INCIDENT	*NUMBER THIS MONTH*	*NUMBER YTD*	*NUMBER THIS MONTH LAST YEAR*	*NUMBER YTD LAST YEAR*	*PERCENTAGE YTD*
Fire	7	49	1	48	2%
Overpressure Rupture, Explosion, Overheat - no fire	1	7	0	5	40%
Rescue & EMS Incidents	37	367	12	82	348%
Hazardous Conditions - no fire	15	190	13	136	40%
Service Call	31	206	15	209	-1%
Good Intent Call	27	257	22	236	9%
False Alarm & False Call	29	304	21	296	3%
Severe Weather & Natural Disaster	0	81	0	17	376%
Special Incident Type	0	1	0	1	0%
TOTAL INCIDENTS	**147**	**1462**	**84**	**1030**	**42%**

SUMMARY OF INSPECTION

TYPE OF INSPECTIONS	*NUMBER THIS MONTH*	*NUMBER YTD*	*NUMBER THIS MONTH LAST YEAR*	*NUMBER YTD LAST YEAR*	*PERCENTAGE YTD*
Residential	10	152	8	122	25%
Residential New Systems	0	0	0	0	0%
Residential Fire Sprinkler	0	0	0	2	-200%
Commercial	9	49	6	371	-87%
Plan Review/Site Inspections	3	20	0	7	186%
Reinspection	18	40	22	342	-88%
Occupancy Certificates	0	0	0	0	0%
TOTAL INSPECTIONS	**40**	**261**	**36**	**844**	**-69%**
Violations Found:	29	172	6	666	-74%
YTD Violations to be Corrected:		72		660	
YTD Violations Corrected:		47		590	
Correction Percentage:		65%		89%	

December 3, 2016

J. Carlton Cole, Fire Chief

MINUTES OF
VILLAGE COUNCIL REGULAR MEETING
NOVEMBER 15, 2016

395 MAGNOLIA ROAD
ASSEMBLY HALL
PINEHURST, NORTH CAROLINA
4:30 P.M.

The Pinehurst Village Council held a Regular Meeting at 4:30 p.m., Tuesday, November 15, 2016 in the Assembly Hall of the Pinehurst Village Hall, 395 Magnolia Road, Pinehurst, North Carolina. The following were in attendance:

Ms. Nancy Roy Fiorillo, Mayor
Ms. Claire L. Berggren, Councilmember
Mr. John Bouldry, Councilmember
Mr. John R. Cashion, Mayor Pro-Tem
Mr. Clark Campbell, Councilmember
Mr. Jeffrey M. Sanborn, Village Manager
Ms. Lauren M. Craig, Village Clerk

And approximately 42 attendees, including 9 staff and 1 press.

1. Call to Order.
Mayor Nancy Roy Fiorillo called the meeting to order.

2. Invocation and Pledge of Allegiance.
Dr. Matt Stillman of Trinity Christian Fellowship led the invocation and Mayor Fiorillo led everyone in the Pledge of Allegiance.

3. Reports.

Manager

- Update on the Greens Project: The Public Records Request search has been split into two searches with the criteria and the first search has been completed and staff is starting on the second set now. The developers have fallen short on the minimum square footage for the apartment size and the ball is in their court to fix this and come back to the Village before a building permit can be issued. The trailer on their property is not in compliance with Village ordinances and is going through the Village's code enforcement process.
- Street resurfacing and repair has started as a two phase effort since the hurricane damaged the company contracted for the work. The Village in the meantime has contracted with another company to get some of the work done.

Council

- Councilmember Bouldry said well done to the staff for getting the Moore County Transportation Plan survey out to the public.
- Mayor Fiorillo said the Village had a very nice Veterans' ceremony on November 11 and Southern Pines had a parade on Saturday. Also please remember December 7 is the 75 anniversary of Pearl Harbor and a commemoration will be held at Marshall Park at 11:00am.

4. Motion to Approve Consent Agenda.

All items listed below are considered routine or have been discussed at length in previous meetings and will be enacted by one motion. No separate discussion will be held unless requested by a member of the Village Council.

A. Consider a resolution to adopt the Cape Fear Regional Hazard Mitigation Plan.
B. Public Safety Reports.

DRAFT

Police Department
Fire Department

C. Approval of Draft Village Council Meeting Minutes.
October 11, 2016 Work Session
October 25, 2016 Regular Meeting

End of Consent Agenda.
Councilmember Cashion moved to approve the Consent Agenda. The motion was seconded by Councilmember Berggren and passed unanimously with a vote of 5-0.

5. **Consider a resolution appointing the new chairperson for the Board of Adjustment.**
Manager Jeff Sanborn explained the Board of Adjustment will need Council to appoint a new Chairperson since Richard Ashton's term ends on November 30. Council held a discussion with Leo Santowasso about his interest in the Chairperson position for the Board of Adjustment. Upon a motion by Councilmember Berggren, seconded by Councilmember Bouldry, Council unanimously approved Resolution 16-33 appointing Leo Santowasso as the new Chairperson for the Board of Adjustment by a vote of 5-0.

6. **Presentation of the Government Finance Officers Distinguished Budget Presentation Award.**
Natalie Hawkins, Assistant Village Manager, explained the Village was recognized by the Government Finance Officers Association with the Distinguished Budget Presentation Award for its FY 2017 Strategic Operating Plan. She said this is the 10th consecutive year the Village has received this award. Ms. Hawkins congratulated John Frye, Financial Services Director, and his team for a job well done.

7. **Presentation of the Comprehensive Annual Financial Report (CAFR) and Financial Condition Assessment.**
John Frye, Financial Services Director, presented the Village's Comprehensive Annual Financial Report (CAFR) for the year ended June 30, 2016 which have been prepared in accordance with generally accepted accounting principles (GAAP) and audited in accordance with Government Auditing Standards by a firm of licensed certified public accountants. Mr. John Frank of Dixon Hughes Goodman, LLP presented the firm's opinion on these statements. Mr. Frye also presented the Village's financial condition assessment with five-year trend information and comparative data from peer municipalities. Mayor Fiorillo explained the process the Village takes to build its budget and Strategic Operating Plan.

8. **Presentation of the Midland Road Corridor Study Report.**
Brandon Jones from NC DOT and Richard Adams from Kimley-Horn Consulting Engineers presented the report on the Midland Road Corridor Study. Mr. Jones explained trees along Midland Road were marked with ribbon to depict the trees that would be removed according to this plan by a citizen in Southern Pines. Richard Adams gave a presentation on behalf of the steering committee and project team. Mr. Adams noted the planning process and ways they obtained public input and participation. He covered roadway issues and observations, including traffic safety along the Midland Road corridor, access management, traffic congestion, and bicycle and pedestrian connectivity. Mr. Adams covered roadway recommendations which included cross section changes and access management to close approximately 50 median closures, 5 conversions to directional crossovers, and left turn lane and sight distance improvements for all remaining median breaks. He discussed the two proposed roundabouts located at Airport Road and Highway 22. He also explained the recommendation for bicycle and pedestrian paths along the corridor. Mr. Adams shared several of the proposed major projects that came out of the recommendations. Mr. Adams covered the safety benefits of the roadway recommendations and the implementation plans.

Audience member Bo Bozarth asked about the timeline for implementation and Mr. Jones from NC DOT said the NC 22 roundabout could be done in 2018 and the other projects have not received funding yet.

DRAFT

Audience member Leo Santowasso asked about the MidPines and Pine Needles intersection with Midland Road and asked if there is any significant right of way acquisition needed for these projects.

Audience member Bob Klug said his family owns Midland CC, Knollwood Village, and Pinehurst Area Realty and has five medians affected by this plan. He said taking out 335 trees affects the iconic nature of the corridor. He said the hot zones of the existing crash data have already been addressed or will be with the roundabout at NC 22. He thinks the public needs more information on this plan before it is approved.

Mayor Fiorillo asked about the approval process and Mr. Jones from NC DOT said they would like the town and the Village to endorse the final study, even if there are changes to be made after they receive feedback. Once each project is being designed and implemented, there will be additional input from the towns.

Audience member Judy Davis said the heat map is dated from 2010-2012 and she asked if a traffic light was considered at Carolina Eye. She also asked if the marked trees are also done at the NC 22 roundabout project but Mr. Jones said it was marked around the traditional intersections and cross overs only. Mr. Adams said the local data for the heat map is through 2015.

Mayor Fiorillo suggested the Village could gather more input from residents and relay that information to the NC DOT regarding the changes proposed around Midland Country Club and Carolina Eye. Mayor Fiorillo also asked about the suggestion for reducing the speed limit and Brandon said this is not off the table and would have to be evaluated further.

Audience member Tom Campbell asked for clarification about boundaries between Pinehurst and Southern Pines.

Audience member Inge Dahl said she is a former winner of a roadside beautification award and she is shocked about the number of trees that are being proposed for removal.

9. Consider a sponsorship request for the use of Tufts Park.

Mark Wagner, Director of Parks and Recreation, explained staff has received a request from Inge Dahl with Weichert Realtors Town & Country, regarding an event they have planned for Saturday, November 19th requesting that fees be lowered or waived that are associated with the use of Tufts Park. Mr. Wagner explained typical rental rates for the use of the park include a $100 deposit, $250 per day fee for residents or $325 per day fee for non-residents. He explained the purpose of the event is bring awareness to the funding need of the Moore Humane Society to construct a future no kill animal shelter near the airport. He said the group plans to have a tent set up on the grounds with animals available for adoption and also will be accepting donations for the Humane Society. Upon review of the Council-adopted Village Sponsorship Requests Policy, Mr. Wagner said staff believes this is a Category B request due to the real estate marketing that will be taking place during the event. Council held a discussion about this and formed a consensus to waive the entire fee for this event and the fee if there is a necessary tent permit.

10. Q1 Update on the Status of the FY 2017 Strategic Operating Plan Implementation.

Natalie Hawkins, Assistant Village Manager, presented the Q1 update on the status of the implementation of the FY 2017 Strategic Operating Plan (SOP) Initiative Action Plans (IAPs). She explained of the IAPs, 9 are in progress, but not on schedule, 13 are in progress and on schedule, 2 have been completed, and 1 is being recommended for deletion. Ms. Hawkins gave an update on several of the projects and the reasons for their status if not on track. Ms. Hawkins also explained the Initiative Action Plan Metrics data that was included in the report to help ensure the Village's annual goals are achieved. Natalie commended department heads and staff for making sure they are implementing the plans that Council has funded.

DRAFT

11. Presentation of the Annual Risk Management Committee Report with employee health insurance benefit package recommendations.

Jeff Batton, Assistant Village Manager, presented the Annual Risk Management Committee report on the Village's insurance programs. Mr. Batton explained after reviewing submittals from BCBS and FirstCarolinaCare (FCC), the Committee's recommendation for calendar year 2017 is to switch providers to FCC. The Committee recommended no changes to dental insurance, Life and AD&D, Long Term Disability providers. Regarding Flexible Spending Accounts, the Committee explained the need to switch to Flores & Associates, LLC. The Committee also evaluated the Business Insurance Program and the Workers' Compensation Program and Jeff shared this information. Upon a motion by Councilmember Cashion, seconded by Councilmember Berggren, Council authorized the Mayor or her designee to execute the contract with FirstCarolinaCare for employee health insurance for calendar year 2017 by a vote of 5-0.

12. Consider the Resolution Designating Applicant's Agent for Federal and/or State Disaster Assistance.

John Frye, Financial Services Director, explained the Village suffered damages from Hurricane Matthew on October 7-8, 2016 and intends to apply for Federal and State disaster assistance funding. He explained in order for the Village to apply for funds from the U.S. Department of Homeland Security, Federal Emergency Management Agency (FEMA), the North Carolina Division of Emergency Management requires the Village to adopt a "Resolution-Designation of Applicant's Agent" which designates the Village's primary and secondary agents. Mr. Frye said staff recommends that Jeff Sanborn and John Frye be authorized to serve as the Village's agents. Upon a motion by Councilmember Berggren, seconded by Councilmember Campbell, the Council unanimously approved Resolution 16-31 designating the applicant's agent for the Village of Pinehurst to apply for federal and/or state disaster assistance by a vote of 5-0.

13. Consider a budget amendment to complete the Public Services renovation project.

Jeff Batton, Assistant Village Manager, explained the need for Council to consider a budget amendment for $155,000 to complete the renovation of the Public Services site. Mr. Batton explained the five main components left to be completed and explained the breakdown of funds for the project. After further conversation, Council determined to proceed with the plans of the two bay addition. Upon a motion by Councilmember Cashion, seconded by Councilmember Campbell, the Council unanimously approved Ordinance 16-19 amending the budget for the Public Services renovation to include the fleet bay addition by a vote of 5-0.

14. Other Business.

- Manager Jeff Sanborn noted the Strategic Planning Retreat will need to be rescheduled to accommodate Councilmember Bouldry and Council agreed to Monday, December 12.

15. Comments from Attendees.

- Judy Davis asked about the math for the public services renovation project and Jeff Batton explained the reasoning for the budget amendment approved by Council. Ms. Davis also asked the Manager to give another recap of the Greens project since she was not in attendance at the beginning of the meeting.

16. Motion to Adjourn.

Councilmember Campbell moved to adjourn the Regular Meeting. The motion was seconded by Councilmember Cashion and carried unanimously. The Regular Meeting adjourned at 7:25p.m.

Respectfully Submitted,

Lauren M. Craig
Village Clerk

DRAFT

VILLAGE OF PINEHURST
BUDGET AMENDMENTS APPROVED BY BUDGET OFFICER
FOR THE PERIOD NOVEMBER 8 - DECEMBER 7, 2016

Under Village of Pinehurst Ordinance #16-09, the Village Council grants the Budget Officer, or Village Manager, the ability to transfer appropriations under specific conditions. These conditions allow transfers of up to $10,000 between departments (including contingency) of the same fund for the FY 2017 Budget. The Budget Officer may **not** transfer monies between funds at any time.

According to Section 159-15 of The Local Government Budget and Fiscal Control Act, "any such transfers shall be reported to the governing board at its next regular meeting and shall be entered in the minutes". Listed below are the amendments authorized by the Budget Officer for the period specified above.

Note: Since appropriations are made at the department level, line item adjustments within the same department may be made without limit and do not require a report since they do not actually amend the adopted budget ordinance.

	ACCOUNT NUMBER	DESCRIPTION	DEBIT	CREDIT	APPROVED DATE
1	10-40-720-7300	Capital Outlay: Furniture and Equipment	$ 600		12/6/2016
	10-40-720-9999	Contingency		$ 600	
		(To cover additional costs associated with the Gateway sign project in the Community Development capital outlay line item)			
2	10-20-420-5300	Contracted Services	$ 7,600		12/6/2016
	10-20-420-7700	Capital Outlay: Infrastructure		$ 7,600	
		(Transfer capital outlay infrastructure funding to Contracted Services for drainage projects that do not meet the capitalization threshold of $5,000)			

Uprising Theatre Company

December 5, 2016

Dear Village of Pinehurst Mayor and Council Members,

We are respectfully proposing a summer Shakespeare Festival in Tufts Memorial Park, Pinehurst, NC, June 2017.

We had a Not-For-Profit (501c3) named the Uprising Theatre Company in California that ran successfully for over 10 years in Los Angeles. However, we recently transferred the Not-for-profit theatre company to North Carolina.

The title of our company is **Shakespeare in the Pines**. The co-founders and co-Artistic Directors — Carolanne Marano and Dr. Jonathan Drahos — are currently developing articles of nonprofit incorporation, selecting a board of directors, establishing bylaws structure, and opening a bank account for the company in Pinehurst. It is the mission of **Shakespeare in the Pines** to actively reach out to local high schools and middle school educators-using **Shakespeare in the Pines** as the main collaborative tool- to create a program entitled Y.E.S. (Youth Experience Shakespeare). Students will have the opportunity to engage with the eloquence of language to enrich their learning perspectives, self confidence and communication skills. This program will be directly related to **Shakespeare in the Pines** broader mission of enriching our community with cultural experience.

Shakespeare in the Pines endeavors to bring exemplary cultural and artistic entertainment to the community of Pinehurst. We will engage the community with exciting and thought provoking Shakespearean comedies, romances and dramas. Our mission is to enhance Pinehurst's cultural arts tradition by enhancing our productions with community arts education programs.

We will hire professional performers on a Guest Artist Agreement with Actor's Equity Association (AEA) as well as non-professional actors. We will also hire local artists, designers, actors, and stage managers. Our first production will be Shakespeare's hilarious comedy *Much Ado About Nothing.*

The proposed dates for the performance are June 2nd, 3rd and 4th of 2017.

General admission will be free. However, tickets for VIP seating will be available for purchase.

The **Shakespeare in the Pines** Nonprofit Company will organize a series of fundraising events benefiting the company this coming year. All of the funds raised will be used for production costs stated below.

The following is a general breakdown of expenses and these will be the sole responsibility of **Shakespeare in the Pines**:

Director: $ 3,000.00
Choreographer: $ 1,000.00
Stage Manager: $ 1,920.00

Costume Designer: $ 2,000.00
Costumes, Materials and Construction: $ 2,500.00
Set Designer: $ 2,000.00
Set Materials and Construction: $ 2,000.00
Lighting Designer: $ 1,000.00
Talent/Actors
Equity Guest Artists: $16,000.00
Housing for Talent $10,000.00
Total: $41,920.00

Request for Support from Village of Pinehurst:
As a sponsorship contributor, we propose that the Village of Pinehurst provide:

- Rehearsal Space (Pinehurst Assembly Hall, Fair Barn or alternate space)
    - Dates: Monday-Saturday; May 10-28, 2017; 10AM-6PM

- Use of Tufts Park for one week (technical/set design)
    - May 29- June 4, 2017

- Use of Tufts Park for performances
    - June 2, 3, and 4, 2017 (2 shows on Saturday, June 3)

- Use of Village Equipment
    - Mobile Stage on May 29-June 4, 2017 for technical and performances
    - Picnic Tables (as many as available to place around perimeter of the lawn)
    - Pop-up canopies, tables and chairs as available

- Publicity presence in areas of parks and recreation events literature and websites.

- Port-a-potties for show dates
    - June 2, 3 & 4, 2017

- Use of Fair Barn for a fundraising Event
    - Event Date: Thursday, January 19, 2017
    - Requesting fees to be waived for facility rental, tables, chairs, stage and other equipment available for rental at the Fair Barn facility.

Thank you very much for your kind consideration, and for your enthusiasm in making this dream event become a reality!

Respectfully,

Jonathan Drahos, PhD.
Associate Professor/Director of Theatre
University of North Carolina, Pembroke

541-631-8241
Carolanne Marano
Director/Choreographer
541-631-8242

Batts Inc
BOX 1, 108 S. MAIN ST.
ADVANCE, IN 46102

Office 765-676-5123 - FAX 765-676-5275 email jrb@battsinc.com cell 317-370-1735

Ray Skellington
Track Supt. Village of Pinehurst
395 Magnolia Rd, Pinehurst NC 28374 November 21,2016

Quote # 112016 Quote Expires December 30,2016

Includes:
Trackpro 4000 Gallon water truck mounted on International chassis as per attached Chassis specification.
4000 gallon 304 – 2 B stainless steel tank.
Tank will have white graphics in lieu of paint.
Sight gauge, drivers side 24 inches from front seam of tank.
Two inch plastic boards between frame and tank.
10 inch wide stainless steel ladder, driver side front.
Two inch hydrant fill with air gap.
Rotaing beacon light at rear top of tank.
Stainless steel fenders, with mud flaps front and rear.
DOT Lighting package.
Stainless V-mount brackets, chassis frame to tank.
304 stainless steel super structure, sub-frame.
8 foot spray bar at rear with brass nozzles located on 12 inch centers.
8 foot side mounted spray boom with brass nozzles on 12 inch centers.
Cab operated hydraulic cylinder will fold side boom in and out.
Rear bumper 2 x 6 rectangular tubimg.
Wide angle spray nozzles located both sides, front, middle and rear.
GPS Rate control system, with ability to change rates on the go.
All controls operated from cab of truck.
Front engine drive hydraulic system,
75 Gallon hydraulic reservoir.
Product pump rated at 800 GPM.
Electric rewind hose reel located rear of unit.
System start-up and training at your facility

Net Price FOB Pinehurst NC $ 194,903.00
Price does not include FET or State sales tax.
Terms: Net due upon delivery of unit.
Delivery: 120 days ARO

Batts Inc
John R Batts
317-370-1735

BID FORM:

FORM OF PROPOSAL

From: Bidder Batts Inc.
Address 108 S. Main St. P.O. Box 1
City Advance State IN ZIP 46102
Tele: (765) 676-5123 FAX: (765) 676-5275

To: Village of Pinehurst
Mark Wagner, Director
Parks and Recreation
395 Magnolia Rd.
Pinehurst, NC 28374

1. **BID PROPOSAL**

Having carefully examined the Bidding Documents and Water Truck Bid Specifications for the **Village of Pinehurst Harness Track – New Water Truck Purchase** dated **November 10, 2016,** the undersigned hereby proposes and agrees to provide all labor, materials, equipment, transportation and other facilities as necessary and/or required to execute all of the work described by the aforesaid Bidding Documents for the total lump sum consideration of One and Dollars ($ 194,903.00), said amount hereinafter referred to as the Total Bid Proposal.

2. The undersigned declares that the person or persons signing the Proposal is/are fully authorized to sign on behalf of the firm listed and to fully bind the firm listed to all the Proposal's conditions and provisions thereof.

3. It is agreed that no person, persons nor company other than the firm listed below or as otherwise indicated has any interest whatsoever in this Proposal or the contract that may be entered into as a result of the Proposal and that in all respects the Proposal is legal and firm, submitted in good faith without collusion or fraud.

4. It is agreed that the undersigned has complied or will comply with all requirements of local, state, and national laws, and that no legal requirement has been or will be violated in making or accepting this Proposal, in awarding the contract to him/her and/or in the prosecution of the work required.

5. The Bidder hereby agrees to commence work under this contract on or before a date to be specified in written "Notice to Proceed" from the Owner and to fully complete the project by the date specified in the Notice to Bidders.

6. **AGREEMENTS:**

The Bidder understands that the Owner reserves the right to reject any or all bids and to waive any informalities in the bidding.

The Bidder agrees that this bid shall be valid and may not be withdrawn for a period of 30 calendar days after the scheduled closing time for receiving bids.

Upon receipt of written notice of the acceptance of this bid, Bidder will execute the formal Contract attached within five (5) days and deliver, in compliance with the instructions to bidders, all submittals required.

E-Verify – The bidder and their subcontractors with 25 or more employees in North Carolina as defined in Article 2 of Chapter 64 of the NC General Statutes must comply with E-Verify requirements to contract with the Village. E-Verify is a Federal program operated by the US Department of Homeland Security and other federal agencies, or any successor or equivalent program used to verify the work authorization of newly hired employees pursuant to federal law.

Iran Divestment Act – As of the date of this agreement, the bidder, and all subcontractors utilized by the bidder, is not listed on the Final Divestment List created by the State Treasurer pursuant to N.C.G.S. 143-6A-4 and will not utilize any subcontractor performing work under this agreement which is listed on the Final Divestment List. The Final Divestment List can be found on the State Treasurer's website at the address www.nctreasurer.com/Iran and should be updated every 180 days.

7. The following information is provided pursuant to the Contract Documents:

Legal Name of Firm:

Batts Inc

If Firm is a corporation, state that corporation is organized under the laws of the State of Indiana
Please affix corporate seal to this Form of Bid.

If Firm is a partnership, state names of partners:

_____

_____

If Firm is an individual using a trade name, state name of individual

_____

Respectfully submitted, this

21 day of November, 2016

(Signature) John R Batts

(Name Typed) John R. Batts

(Title) President

(SEAL IF BIDDER IS A CORPORATION)

End of Form of Proposal

INTERNATIONAL®

November 18, 2016

Prepared For:
Stoke Muncie
Jon Rodeffer
3801 E McGalliard Rd.
Muncie, IN 47303-1535
(765)282 - 2276
Refrence ID: N/A

Presented By:
SELKING INTERNATIONAL
Jon Rodeffer
3801 EAST MCGALLIARD
MUNCIE IN 47303 -
(765)282-2276

Thank you for the opportunity to provide you with the following quotation on a new International truck. I am sure the following detailed specification will meet your operational requirements, and I look forward to serving your business needs.

Model Profile
2018 7600 SBA 6X4 2010 (SF667)

APPLICATION:	Water Truck
MISSION:	Requested GVWR: 58000. Calc. GVWR: 58000 Calc. Start / Grade Ability: 20.63% / 2.22% @ 55 MPH Calc. Geared Speed: 58.4 MPH
DIMENSION:	Wheelbase: 242.00, CA: 174.90, Axle to Frame: 96.00
ENGINE, DIESEL:	{Navistar N13} EPA 2010, SCR, 365 HP @ 1700 RPM, 1250 lb-ft Torque @ 1000 RPM, 2100 RPM Governed Speed, 365 Peak HP (Max)
TRANSMISSION, AUTOMATIC:	{Allison 3000_RDS_P} 5th Generation Controls; Close Ratio, 5-Speed, With Overdrive; On/Off Hwy; Includes Oil Level Sensor, With PTO Provision, Less Retarder, With 80,000-lb GVW & GCW Max.
CLUTCH:	Omit Item (Clutch & Control)
AXLE, FRONT NON-DRIVING:	{Meritor MFS-18-133A} Wide Track, I-Beam Type, 18,000-lb Capacity
AXLE, REAR, TANDEM:	{Meritor MT-40-14X-4DFR} Single Reduction, 0.433"(11mm) Wall Housing Thickness, 40,000-lb Capacity, R Wheel Ends Gear Ratio: 5.86
CAB	Conventional
TIRE, FRONT:	(2) 315/80R22.5 Load Range L HSC1 (CONTINENTAL), 484 rev/mile, 68 MPH, All-Position
TIRE, REAR:	(8) 11R22.5 Load Range G HDR2 (CONTINENTAL), 491 rev/mile, 75 MPH, Drive
SUSPENSION, REAR, TANDEM:	{Hendrickson RT-403} Walking Beam Type 54" Axle Spacing; 40,000-lb Capacity With Rubber Center Bushings
FRAME REINFORCEMENT:	Outer "C" Channel, Heat Treated Alloy Steel (120,000 PSI Yield); 10.813" x 3.892" x 0.312"; (274.6mm x 98.9mm x 8.0mm); 480.0" (12192mm) Maximum OAL
PAINT:	Cab schematic 100GS Location 1: 9219, Winter White (Std) Chassis schematic N/A

Code	Description
SF6700	Base Chassis, Model 7600 SBA 6X4 2010 with 242.00 Wheelbase, 174.90 CA, and 96.00 Axle to Frame.
1570	TOW HOOK, FRONT (2) Frame Mounted
1CBJ	FRAME RAILS Heat Treated Alloy Steel (120,000 PSI Yield); 10.125" x 3.580" x 0.312" (257.2mm x 90.9mm x 8.0mm); 480.0" (12192) Maximum OAL
1GBP	FRAME REINFORCEMENT Outer "C" Channel, Heat Treated Alloy Steel (120,000 PSI Yield); 10.813" x 3.892" x 0.312"; (274.6mm x 98.9mm x 8.0mm); 480.0" (12192mm) Maximum OAL
1LZ0	BUMPER, FRONT Stainless Steel Clad Aluminum, Swept Back
1WBC	CROSSMEMBER, SUSPENSION (1) 7-Piece Steel Replacing (1) Double Dogbone, Forward
1WDS	FRAME EXTENSION, FRONT Integral; 20" In Front of Grille
1WHP	WHEELBASE RANGE 183" (465cm) Through and Including 248" (630cm)
1WMA	CROSSMEMBER, INTERMEDIATE (1) 5-Piece ilo Each Single Dogbone With 4x2, 4x4 Chassis and Each Double Dogbone With 6x4, 6x6 and 8x6 Tridem Chassis
2AR2	AXLE, FRONT NON-DRIVING {Meritor MFS-18-133A} Wide Track, I-Beam Type, 18,000-lb Capacity
	Notes : The following features should be considered when calculating Front GAWR: Front Axles; Front Suspension; Brake System; Brakes, Front Air Cam; Wheels; Tires.
3708	SHOCK ABSORBERS, FRONT
3770	SPRINGS, FRONT AUXILIARY Rubber
3ACF	SUSPENSION, FRONT, SPRING Multileaf, Shackle Type; 18,000-lb Capacity; Less Shock Absorbers
	Includes : SPRING PINS Rubber Bushings, Maintenance-Free
	Notes : The following features should be considered when calculating Front GAWR: Front Axles; Front Suspension; Brake System; Brakes, Front Air Cam; Wheels; Tires.
4091	BRAKE SYSTEM, AIR Dual System for Straight Truck Applications
	Includes : BRAKE LINES Color and Size Coded Nylon : DRAIN VALVE Twist-Type : GAUGE, AIR PRESSURE (2) Air 1 and Air 2 Gauges; Located in Instrument Cluster : PARKING BRAKE CONTROL Yellow Knob, Located on Instrument Panel : PARKING BRAKE VALVE For Truck : QUICK RELEASE VALVE On Rear Axle for Spring Brake Release: 1 for 4x2, 2 for 6x4 : SLACK ADJUSTERS, FRONT Automatic : SLACK ADJUSTERS, REAR Automatic : SPRING BRAKE MODULATOR VALVE R-7 for 4x2, SR-7 with relay valve for 6x4
	Notes : Rear Axle is Limited to 46,000-lb GAWR with Code 04091 BRAKE SYSTEM, AIR and Standard Rear Air Cam Brakes Regardless of Axle /Suspension Ordered.
4193	BRAKES, FRONT, AIR CAM 16.5" x 6", Includes 24 SqIn Long Stroke Brake Chambers
	Notes : The following features should be considered when calculating Front GAWR: Front Axles; Front Suspension; Brake System; Brakes, Front Air Cam; Wheels; Tires.
4732	DRAIN VALVE {Berg} Manual; With Pull Chain, for Air Tank
4AZA	AIR BRAKE ABS {Bendix AntiLock Brake System} Full Vehicle Wheel Control System (4-Channel)

Code	Description
4EBU	AIR DRYER (Meritor Wabco System Saver 1200) with Heater
	Includes : AIR DRYER LOCATION Inside Left Rail, Back of Cab
4EXU	BRAKE CHAMBERS, REAR AXLE (Bendix EverSure) 30/30 Spring Brake
4EXV	BRAKE CHAMBERS, FRONT AXLE (Bendix) 24 Sqin
4NDE	BRAKES, REAR, AIR CAM S-Cam; 16.5" x 7.0"; Includes 30/30 Sq.In. Long Stroke Brake Chamber and Spring Actuated Parking Brake
	Notes : The following features should be considered when calculating Rear GAWR: Rear Axles; Rear Suspension; Brake System; Brakes, Rear Air Cam; Brake Shoes, Rear; Special Rating, GAWR; Wheels; Tires.
4SPN	AIR COMPRESSOR (Bendix BA-921 Head Unload) 15.9 CFM Capacity, Single Cylinder
57C8	STEERING COLUMN Tilting
5CAL	STEERING WHEEL 2-Spoke, 18" Dia., Black
5PTB	STEERING GEAR (2) (Sheppard M100/M80) Dual Power
7BEP	EXHAUST SYSTEM Switchback Horizontal Aftertreatment Device, Frame Mounted Right Side Under Cab; Includes Single Vertical Tail Pipe, Frame Mounted Right Side Back of Cab
	Includes : EXHAUST HEIGHT 10' Exhaust Height - Based on Empty Chassis with Standard Components (+ or - 1" Height)
7WBA	TAIL PIPE (1) Turnback Type, Bright, for Single Exhaust
7WBS	MUFFLER/TAIL PIPE GUARD (1) Bright Stainless Steel
8000	ELECTRICAL SYSTEM 12-Volt, Standard Equipment
	Includes : DATA LINK CONNECTOR For Vehicle Programming and Diagnostics In Cab : FUSES, ELECTRICAL SAE Blade-Type : HAZARD SWITCH Push On/Push Off, Located on Top of Steering Column Cover : HEADLIGHT DIMMER SWITCH Integral with Turn Signal Lever : HEADLIGHTS (2) Sealed Beam, Round, with Chrome Plated Bezels : JUMP START STUD Located on Positive Terminal of Outermost Battery : PARKING LIGHT Integral with Front Turn Signal and Rear Tail Light : STARTER SWITCH Electric, Key Operated : STOP, TURN, TAIL & B/U LIGHTS Dual, Rear, Combination with Reflector : TURN SIGNAL SWITCH Self-Cancelling for Trucks, Manual Cancelling for Tractors, with Lane Change Feature : WINDSHIELD WIPER SWITCH 2-Speed with Wash and Intermittent Feature (5 Pre-Set Delays), Integral with Turn Signal Lever : WINDSHIELD WIPERS Single Motor, Electric, Cowl Mounted : WIRING, CHASSIS Color Coded and Continuously Numbered
8518	CIGAR LIGHTER Includes Ash Cup
8GXJ	ALTERNATOR (Leece-Neville AVI160P2013) Brush Type; 12 Volt 160 Amp. Capacity, Pad Mount
8HAB	BODY BUILDER WIRING Back of Standard Cab at Left Frame or Under Extended or Crew Cab at Left Frame; Includes Sealed Connectors for Tail/Amber Turn/Marker/ Backup/Accessory Power/Ground and Sealed Connector for Stop/Turn
8MKL	BATTERY SYSTEM (International) Maintenance-Free, (3) 12-Volt 1950CCA Total
8RMD	RADIO AM/FM/WB/Clock/3MM Auxiliary Input, with Multiple Speakers

Code	Description
8VAY	HORN, ELECTRIC Disc Style
8VUL	BATTERY BOX Steel With Plastic Cover, 18" Wide, 2, 3, or 4 Battery Capacity, Mounted Left Side Back of Cab
8WCL	HORN, AIR Black, Single Trumpet, Air Solenoid Operated
8WPH	CLEARANCE/MARKER LIGHTS (5) (Truck Lite) Amber LED Lights, Flush Mounted on Cab or Sunshade
8WXG	STARTING MOTOR (Mitsubishi Electric Automotive America 105P) 12-Volt, with Soft-Start
8XAH	CIRCUIT BREAKERS Manual-Reset (Main Panel) SAE Type III With Trip Indicators, Replaces All Fuses Except For 5-Amp Fuses
8XGT	TURN SIGNALS, FRONT Includes LED Side Turn Lights Mounted on Fender
9585	FENDER EXTENSIONS Rubber
9HBM	GRILLE Stationary, Chrome
9HBN	INSULATION, SPLASH PANELS for Sound Abatement
9WAC	BUG SCREEN Front End; Mounted Behind Grille
9WBK	FRONT END Tilting, Fiberglass, With Three Piece Construction Includes Long Hood
10060	PAINT SCHEMATIC, PT-1 Single Color, Design 100
	Includes : PAINT SCHEMATIC ID LETTERS "GS"
10761	PAINT TYPE Base Coat/Clear Coat, 1-2 Tone
10UAD	VEHICLE REGISTRATION IDENTITY ID for 49 States, Excluding California
11001	CLUTCH Omit Item (Clutch & Control)
12772	ANTI-FREEZE Red, Extended Life Coolant; To -40 Degrees F/ -40 Degrees C, Freeze Protection, for N13 Engines
12850	PTO EFFECTS, ENGINE FRONT for N13 Engines, Less PTO Unit, Includes Adapter Plate on Engine Front Mounted
12864	BLOCK HEATER, ENGINE (Phillips) 120V/1500W
	Includes : BLOCK HEATER SOCKET Receptacle Type; Mounted below Drivers Door
12BDD	ENGINE, DIESEL (Navistar N13) EPA 2010, SCR, 365 HP @ 1700 RPM, 1250 lb-ft Torque @ 1000 RPM, 2100 RPM Governed Speed, 365 Peak HP (Max)
12THT	FAN DRIVE (Horton Drivemaster) Direct Drive Type, Two Speed With Residual Torque Device for Disengaged Fan Speed
	Includes : FAN Nylon
12UNX	FEDERAL EMISSIONS (Navistar N13) EPA, OBD and GHG Certified for Calendar Year 2016
12VBC	AIR CLEANER Single Element
	Includes : AIR CLEANER with Vacuator : GAUGE, AIR CLEANER RESTRICTION Air Cleaner Mounted
12WEG	COLD STARTING EQUIPMENT Automatic; With Engine ECM Control

Code	Description
12VUJ	EMISSION COMPLIANCE Low NOx Idle Engine, Complies with California Clean Air Regulations; Includes "Certified Clean Idle" Decal located on Driver Door
12XAW	RADIATOR Aluminum; Welded, Front to Back CrossFlow System, 1593 Sqin, 1012 Sqin CAC, 1543 Sqin 3 Core LTR
13AVJ	TRANSMISSION, AUTOMATIC {Allison 3000_RDS_P} 5th Generation Controls; Close Ratio, 5-Speed, With Overdrive; On/Off Hwy; Includes Oil Level Sensor, With PTO Provision, Less Retarder, With 80,000-lb GVW & GCW Max.
13VWW	OIL COOLER, AUTO TRANSMISSION {Modine} Water to Oil Type
13VEL	TRANSMISSION SHIFT CONTROL {Allison} Push-Button Type; for Allison 3000 & 4000 Series Transmission
13VLP	TRANSMISSION OIL Synthetic; 29 thru 42 Pints
13VUC	ALLISON SPARE INPUT/OUTPUT for Rugged Duty Series (RDS); General Purpose Trucks, Construction
13VVU	SHIFT CONTROL PARAMETERS Allison 3000 or 4000 Series Transmissions, 5th Generation Controls, Performance Programming
13XAM	PTO LOCATION Dual, Left and Right Side of Transmission
14GW	AXLE, REAR, TANDEM {Meritor MT-40-14X-4DFR} Single Reduction, 0.433"(11mm) Wall Housing Thickness, 40,000-lb Capacity, R Wheel Ends . Gear Ratio: 5.86 Includes : POWER DIVIDER LOCK Electric over Air Operated, Cab Control with Indicator Light : REAR AXLE DRAIN PLUG (2) Magnetic, For Tandem Rear Axle Notes : The following features should be considered when calculating Rear GAWR: Rear Axles; Rear Suspension; Brake System; Brakes, Rear Air Cam; Brake Shoes, Rear; Special Rating, GAWR; Wheels; Tires.
14UHD	SUSPENSION, REAR, TANDEM {Hendrickson RT-403} Walking Beam Type 54" Axle Spacing; 40,000-lb Capacity With Rubber Center Bushings Includes : CROSSMEMBER, SUSPENSION Stamped Steel Double Dogbone Notes : The following features should be considered when calculating Rear GAWR: Rear Axles; Rear Suspension; Brake System; Brakes, Rear Air Cam; Brake Shoes, Rear; Special Rating, GAWR; Wheels; Tires.
14VVAL	SUSPENSION/REAR-AXLE IDENTITY for Meritor Tandem Rear Axles With Bar-Pin Beam Attachment Type Suspensions
15DYP	DEF TANK 9.5 U.S. Gal. 35.9L Capacity, Frame Mounted Outside Left Rail, Under Cab
15LKU	FUEL/WATER SEPARATOR {Racor} Fuel Pre-Filter and Filter Base, Includes Water-In-Fuel Sensor
15SGJ	FUEL TANK Top Draw; D-Style, Non-Polished Aluminum, 16" Tank Depth, 50 U.S. Gal., 189 L Capacity, with Quick Connect Outlet, Mounted Left Side, Under Cab
15VVCS	FUEL COOLER Less Thermostat; Mounted in Front of Cooling Module
16030	CAB Conventional Includes : ARM REST (2) Molded Plastic; One Each Door : COAT HOOK, CAB Located on Rear Wall, Centered Above Rear Window : CUP HOLDERS Two Cup Holders, Located in Lower Center of Instrument Panel : DOME LIGHT, CAB Rectangular, Door Activated and Push On-Off at Light Lens, Timed Theater Dimming, Integral to Console, Center Mounted : GLASS, ALL WINDOWS Tinted

Code	Description
	: GRAB HANDLE, CAB INTERIOR (1) "A" Pillar Mounted, Passenger Side : GRAB HANDLE, CAB INTERIOR (2) Front of "B" Pillar Mounted, One Each Side : INTERIOR SHEET METAL Upper Door (Above Window Ledge) Painted Exterior Color : STEP (4) Two Steps Per Door
16HEA	GAUGE CLUSTER English With English Electronic Speedometer Includes : GAUGE CLUSTER (6) Engine Oil Pressure (Electronic), Water Temperature (Electronic), Fuel (Electronic), Tachometer (Electronic), Voltmeter, Washer Fluid Level : ODOMETER DISPLAY, Miles, Trip Miles, Engine Hours, Trip Hours, Fault Code Readout : WARNING SYSTEM Low Fuel, Low Oil Pressure, High Engine Coolant Temp, and Low Battery Voltage (Visual and Audible)
16HJH	GAUGE, OIL TEMP, AUTO TRANS , for Allison Transmission
16HKE	GAUGE, AIR CLEANER RESTRICTION {Filter-Minder} With Black Bezel Mounted in Instrument Panel
16HKT	IP CLUSTER DISPLAY On Board Diagnostics Display of Fault Codes in Gauge Cluster
16HU	GAUGE, DEF FLUID LEVEL
16JNT	SEAT, DRIVER {National 2000} Air Suspension, High Back With Integral Headrest, Vinyl, Isolator, 1 Chamber Lumbar, With 2 Position Front Cushion Adjust, -3 to +14 Degree Angle Back Adjust Includes : SEAT BELT 3-Point, Lap and Shoulder Belt Type
16SEE	GRAB HANDLE Chrome; Towel Bar Type With Anti-Slip Rubber Inserts; for Cab Entry Mounted Left Side Only at "B" Pillar
16SMN	SEAT, PASSENGER {National} Non Suspension, High Back, Fixed Back, Integral Headrest, Vinyl
16SNC	MIRRORS (2) {Lang Mekra} Rectangular, Thermostatically Controlled Heated Heads, Bright Finish Heads, with Black Brackets and Arms, Breakaway Type, 7.55" x 14.1" Integral Convex Both Sides, 102" Inside Spacing,
16VVGY	ARM REST, RIGHT, DRIVER SEAT
16VVCT	AIR CONDITIONER {Blend-Air} With Integral Heater & Defroster Includes : HEATER HOSES Premium : HOSE CLAMPS, HEATER HOSE Mubea Constant Tension Clamps : REFRIGERANT Hydrofluorocarbon HFC-134A
16VVJS	INSTRUMENT PANEL Center Section, Flat Panel
16VVKY	HVAC FRESH AIR FILTER
16VVLE	STORAGE POCKET, DOOR Molded Plastic, Full Width; Mounted on Passenger Door
16VVRX	CAB INTERIOR TRIM Deluxe Includes : "A" PILLAR COVER Molded Plastic : CAB INTERIOR TRIM PANELS Cloth Covered Molded Plastic, Full Height; All Exposed Interior Sheet Metal is Covered Except for the Following: with a Two-Man Passenger Seat or with a Full Bench Seat the Back Panel is Completely Void of Covering : CAB, INTERIOR TRIM, CLOSEOUT Lower Dash Closeout Panel; Molded Plastic; Under Instrument Panel Driver Side : CONSOLE, OVERHEAD Molded Plastic; With Dual Storage Pockets with Retainer Nets and CB Radio Pocket : DOOR TRIM PANELS Molded Plastic; Driver and Passenger Doors : FLOOR COVERING Rubber, Black : HEADLINER Soft Padded Cloth : INSTRUMENT PANEL TRIM Molded Plastic with Black Center Section

Code	Description
	; STORAGE POCKET, DOOR (1) Molded Plastic, Full-Length; Driver Door : SUN VISOR (2) Padded Vinyl with Driver Side Toll Ticket Strap, Integral to Console
16VSK	CAB REAR SUSPENSION Air Bag Type
27DJS	WHEELS, FRONT (Accuride 41730) DISC; 22.5x9.00 Rims, Polished Aluminum, 10-Stud, 285.75mm BC, Hub-Piloted, Flanged Nut, with Steel Hubs
28DJ	WHEELS, REAR (Maxion 90541) DUAL DISC; 22.5x8.25 Rims, Painted Steel, 2-Hand Hole, 10-Stud, 285.75mm BC, Hub-Piloted, Flanged Nut, with Steel Hubs
29PAS	PAINT IDENTITY, REAR WHEELS Disc Rear Wheels; With Vendor Applied White Powder Coat Paint
737/135423	(8) TIRE, REAR 11R22.5 Load Range G HDR2 (CONTINENTAL), 491 rev/mile, 75 MPH, Drive
779/545419	(2) TIRE, FRONT 315/80R22.5 Load Range L HSC1 (CONTINENTAL), 484 rev/mile, 68 MPH, All-Position
	Services Section:
40018	WARRANTY Standard for Paystar 5000, and Workstar 7500/7600, Effective with Vehicles Built January 2, 2015 or Later, CTS-2003Z

Batts Inc
BOX 1, 108 S. MAIN ST.
ADVANCE, IN 46102

Office 765-676-5123 - FAX 765-676-5275 email jrb@battsinc.com cell 317-370-1735

Batts Inc
References

November 21,2016

Gary Wolfe
Hoosier Park
Anderson IN
609-923-4310

Javier Barajas
Keeneland
Lexington KY
859-814-7625

Roy Smith
Indiana Grand
Shelbyville IN
317-604-3201

Batts Inc
John R Batts
317-370-1735

INVITATION TO BID

FOR

PURCHASE OF A NEW WATER TRUCK

AT THE PINEHURST HARNESS TRACK

1895

VILLAGE OF

PINEHURST

PARKS & RECREATION

November 10, 2016

Village of Pinehurst, North Carolina
DESCRIPTION OF REQUIREMENTS AND SPECIFICATIONS

Pinehurst Harness Track
Purchase of a New Water Truck with Stainless Steel Tank

I. Introduction

The Village of Pinehurst, North Carolina, herein after referred to as "Village", is seeking bids from qualified manufactures to build or purchase a new 2016 or 2017 tandem axle chassis with a 4,000 gallon stainless steel water tank and spray system. The intent of the Village is to execute a contract with a qualified bidder who has experience in building water truck/tank spray systems designed for use on equestrian training/racing track facilities.

II. Water Truck Bid Specifications

- NEW 2016 or 2017 TANDEM AXLE CHASSIS
- CUMMINS ISL350 HP, ALLISON 3000 RDS AUTOMATIC TRANS 5:29 REAR RATIO.
- 18K FRONT AXLE, 40K REAR AXLE, AIRLINER EXTRA DUTY AIR RIDE SUSPENSION
- 315/80R22.5 FRONT TIRES WITH ALUM WHEELS
- 11R22.5 REAR TIRES WITH STEEL WHEELS
- 50 GALLON ALUM FUEL TANK, 6 GALLON DEF TANK, RH VERTICAL EXHAUST CALIFORNIA CARB COMPLIANT
- NEW 16' 4000 GALLON WATER TANK SYSTEM INSTALLED.
- 3/16" 304 STAINLESS STEEL SHELLS, HEADS AND BAFFLES WELDED 100%
- (2) - 304 STAINLESS STEEL HORIZONTAL AND 1- LONGITUDINAL BAFFLES WELDED 100%
- (2) - 3/16" 304 STAINLESS SUB FRAME SUPPORTS
- REAR MOUNTED SIGHT TUBE WITH SHUT OFF VALVES
- FRONT MOUNTED SIGHT TUBE WITH SHUT OFF VALVES.
- 1/4" 304 STAINLESS STEEL BOX- SHAPED SUB FRAMES
- (2) - 3/4" X 3" RUBBER SKIRTBOARD STRIPS BETWEEN TANK SUBFRAME AND CHASSIS FRAME.
- STAINLESS STEEL REAR OF TANK SAFETY LADDER WITH GRIP STRUT RUNGS.
- (4) - AIR SPRAYS 2-FRONT, 2-SIDES.
- (6)- 3" IRON CLA-VAL STYLE AIR VALVES

- AIR VALVES AT REAR FOR 8' CENTER SPRAY BAR & 1-8' DRIVERS SIDE AIR
- OPEN/CLOSE SPRAY ARM WITH BRASS CONE SPRAY NOZZLES SWITCHED FROM CAB.
- FRONT ADJUSTABLE FAN SPRAYS
- DRIVERS 1- PASSENGERS SIDE SPRAY ADJUSTABLE DUCKBILL SIDE SPRAY.
- (1) - 2" STAINLESS STEEL SCH 40 PIPE HYDRANT FILL PIPE WITH LEGAL AIR GAP
- (2) - 10 GUAGE 304 STAINLESS STEEL BONNET STYLE FENDERS.
- 1/4" A-36 STEEL REAR BUMPER / DRIVERS SIDE SWING OUT ARM MOUNTING FRAME STRUCTURE.
- (2) - SPRING LOADED FRONT TANK MOUNTS 4- SOLID TANK MOUNTS.
- (1) - HOT SHIFT PTO
- (1) - 8 GALLON HYPRO HYDRAULIC PUMP DRIVE SYSTEM WITH VARIABLE PUMP SPEED CONTROL.
- (1) - ATP 4 X3 CENTRIFUGAL WATER PUMP WITH MECHANICAL SEAL 750 GAL AT 65 PSI
- (6) - AIR SWITCH CONTROL PANEL
- HOSE REEL MOUNTING BRACKET INSTALLED ON PASSENGERS SIDE REAR HEAD.
- SAND BLAST, EPOXY, PRIME AND PAINT TANK EXTERIOR POLYURETHANE WHITE.
- LED STOP, TURN & BACK OF TANK.
- LIGHTS, MUD FLAPS, BACKUP ALARM, REFLECTORS AND REFLECTIVE TAPE TO MEET DOT SPECIFICATIONS
- TOP REAR OF TANK AMBER LED BEACON.
- (1) – 1 1/2" X 50' MANUAL REWIND HOSE REEL W/ HOSE AND ADJ NOZZLE.
- FREIGHT TO PINEHURST N.C. 28374
- FET IF APPLICABLE.

III. Bid Content

The bid should comprise of a Total Lump Sum price for the purchase and delivery of the vehicle as built according to the specifications shown. A timeline for build, construction and delivery to Pinehurst, NC must also be provided as part of the bid submittal. Up to three (3) references should also be provided with your bid submittal in addition to examples of previous builds the bidder has completed of a similar nature.

BID FORM:

FORM OF PROPOSAL

From: Bidder Interstate Truck Bodies
Address 3215 W. Lincoln St.
City Phoenix State AZ ZIP 85009
Tele: 602-272-2298 FAX: 602-269-5021

To: Village of Pinehurst
Mark Wagner, Director
Parks and Recreation
395 Magnolia Rd.
Pinehurst, NC 28374

1. **BID PROPOSAL**

Having carefully examined the Bidding Documents and Water Truck Bid Specifications for the **Village of Pinehurst Harness Track – New Water Truck Purchase** dated **November 10, 2016,** the undersigned hereby proposes and agrees to provide all labor, materials, equipment, transportation and other facilities as necessary and/or required to execute all of the work described by the aforesaid Bidding Documents for the total lump sum consideration of _____ Dollars ($ 180,181.20), said amount hereinafter referred to as the Total Bid Proposal.

2. The undersigned declares that the person or persons signing the Proposal is/are fully authorized to sign on behalf of the firm listed and to fully bind the firm listed to all the Proposal's conditions and provisions thereof.

3. It is agreed that no person, persons nor company other than the firm listed below or as otherwise indicated has any interest whatsoever in this Proposal or the contract that may be entered into as a result of the Proposal and that in all respects the Proposal is legal and firm, submitted in good faith without collusion or fraud.

4. It is agreed that the undersigned has complied or will comply with all requirements of local, state, and national laws, and that no legal requirement has been or will be violated in making or accepting this Proposal, in awarding the contract to him/her and/or in the prosecution of the work required.

5. The Bidder hereby agrees to commence work under this contract on or before a date to be specified in written "Notice to Proceed" from the Owner and to fully complete the project by the date specified in the Notice to Bidders.

6. **AGREEMENTS:**

The Bidder understands that the Owner reserves the right to reject any or all bids and to waive any informalities in the bidding.

The Bidder agrees that this bid shall be valid and may not be withdrawn for a period of 30 calendar days after the scheduled closing time for receiving bids.

Upon receipt of written notice of the acceptance of this bid, Bidder will execute the formal Contract attached within five (5) days and deliver, in compliance with the instructions to bidders, all submittals required.

E-Verify – The bidder and their subcontractors with 25 or more employees in North Carolina as defined in Article 2 of Chapter 64 of the NC General Statutes must comply with E-Verify requirements to contract with the Village. E-Verify is a Federal program operated by the US Department of Homeland Security and other federal agencies, or any successor or equivalent program used to verify the work authorization of newly hired employees pursuant to federal law.

Iran Divestment Act – As of the date of this agreement, the bidder, and all subcontractors utilized by the bidder, is not listed on the Final Divestment List created by the State Treasurer pursuant to N.C.G.S. 143-6A-4 and will not utilize any subcontractor performing work under this agreement which is listed on the Final Divestment List. The Final Divestment List can be found on the State Treasurer's website at the address www.nctreasurer.com/Iran and should be updated every 180 days.

7. The following information is provided pursuant to the Contract Documents:

Legal Name of Firm:

Interstate Wreck Rebuilders, Inc.

If Firm is a corporation, state that corporation is organized under the laws of the State of AZ.
Please affix corporate seal to this Form of Bid.

If Firm is a partnership, state names of partners:

_____

_____

If Firm is an individual using a trade name, state name of individual

_____

Respectfully submitted, this

18TH day of November, 2016

(Signature) [signature]

(Name Typed) Mike Miller

(Title) Vice President

(SEAL IF BIDDER IS A CORPORATION)

End of Form of Proposal

IV. Submittal

Information concerning this Request for Proposals may be directed to:

Mark Wagner, Director
Village of Pinehurst Parks and Recreation
Phone: (910) 295-2817
Email: mwagner@vopnc.org

A. All proposals must be received by the Village prior to **3:00 p.m. local time on November 28, 2016**. Proposals shall be delivered clearly marked **"Village of Pinehurst, Harness Track Water Truck Proposal"**. All submittals must be delivered to the Pinehurst Parks and Recreation Department to the attention of Mr. Mark Wagner.

Mailing Address	Physical Address
Village of Pinehurst	Village of Pinehurst
Parks and Recreation Department	Parks and Recreation Department
395 Magnolia Road	395 Magnolia Road
Pinehurst, NC 28374	Pinehurst, NC 28374

B. The proposals will be publicly opened on November 28 at 3:00 p.m. After completion of the evaluation of bid documents, all submitted materials will constitute public records which are subject to public inspection.

C. The Village reserves the right to reject any or all bids, to waive technicalities or informalities and to accept any bid deemed to be in the best interest of the Village.

D. This Invitation to Bid does not commit the Village of Pinehurst to execute an agreement, to pay any costs incurred in the preparation of a bid, or to contract for services.

V. Selection Procedures

A. Phase I - Evaluation of Proposal

Staff will review all bids received from qualified bidders and will seek to award the contract/purchase order to the lowest responsible, responsive bidder.

B. Phase II - Contract Negotiation

Each proposal will be submitted with the understanding that the acceptance to furnish any or all of the items described requires the execution of an Agreement between the Village and the Bidder.

Thereafter, Village staff will make its recommendation regarding contract award to the Village Council who will make the final decision at its December 13, 2016 Council Meeting.

- AIR VALVES AT REAR FOR 8' CENTER SPRAY BAR & 1-8' DRIVERS SIDE AIR
- OPEN/CLOSE SPRAY ARM WITH BRASS CONE SPRAY NOZZLES SWITCHED FROM CAB.
- FRONT ADJUSTABLE FAN SPRAYS
- DRIVERS 1- PASSENGERS SIDE SPRAY ADJUSTABLE DUCKBILL SIDE SPRAY.
- (1) - 2" STAINLESS STEEL SCH 40 PIPE HYDRANT FILL PIPE WITH LEGAL AIR GAP
- (2) - 10 GUAGE 304 STAINLESS STEEL BONNET STYLE FENDERS.
- 1/4" A-36 STEEL REAR BUMPER / DRIVERS SIDE SWING OUT ARM MOUNTING FRAME STRUCTURE.
- (2) - SPRING LOADED FRONT TANK MOUNTS 4- SOLID TANK MOUNTS.
- (1) - HOT SHIFT PTO
- (1) - 8 GALLON HYPRO HYDRAULIC PUMP DRIVE SYSTEM WITH VARIABLE PUMP SPEED CONTROL.
- (1) - ATP 4 X3 CENTRIFUGAL WATER PUMP WITH MECHANICAL SEAL 750 GAL AT 65 PSI
- (6) - AIR SWITCH CONTROL PANEL
- HOSE REEL MOUNTING BRACKET INSTALLED ON PASSENGERS SIDE REAR HEAD.
- SAND BLAST, EPOXY, PRIME AND PAINT TANK EXTERIOR POLYURETHANE WHITE.
- LED STOP, TURN & BACK OF TANK.
- LIGHTS, MUD FLAPS, BACKUP ALARM, REFLECTORS AND REFLECTIVE TAPE TO MEET DOT SPECIFICATIONS
- TOP REAR OF TANK AMBER LED BEACON.
- (1) – 1 1/2" X 50' MANUAL REWIND HOSE REEL W/ HOSE AND ADJ NOZZLE.
- FREIGHT TO PINEHURST N.C. 28374
- FET IF APPLICABLE.

III. Bid Content

The bid should comprise of a Total Lump Sum price for the purchase and delivery of the vehicle as built according to the specifications shown. A timeline for build, construction and delivery to Pinehurst, NC must also be provided as part of the bid submittal. Up to three (3) references should also be provided with your bid submittal in addition to examples of previous builds the bidder has completed of a similar nature.

IV. Submittal

Information concerning this Request for Proposals may be directed to:

Mark Wagner, Director
Village of Pinehurst Parks and Recreation
Phone: (910) 295-2817
Email: mwagner@vopnc.org

A. All proposals must be received by the Village prior to **3:00 p.m. local time on November 28, 2016**. Proposals shall be delivered clearly marked **"Village of Pinehurst, Harness Track Water Truck Proposal"**. All submittals must be delivered to the Pinehurst Parks and Recreation Department to the attention of Mr. Mark Wagner.

Mailing Address	Physical Address
Village of Pinehurst	Village of Pinehurst
Parks and Recreation Department	Parks and Recreation Department
395 Magnolia Road	395 Magnolia Road
Pinehurst, NC 28374	Pinehurst, NC 28374

B. The proposals will be publicly opened on November 28 at 3:00 p.m. After completion of the evaluation of bid documents, all submitted materials will constitute public records which are subject to public inspection.

C. The Village reserves the right to reject any or all bids, to waive technicalities or informalities and to accept any bid deemed to be in the best interest of the Village.

D. This Invitation to Bid does not commit the Village of Pinehurst to execute an agreement, to pay any costs incurred in the preparation of a bid, or to contract for services.

V. Selection Procedures

A. Phase I - Evaluation of Proposal

Staff will review all bids received from qualified bidders and will seek to award the contract/purchase order to the lowest responsible, responsive bidder.

B. Phase II - Contract Negotiation

Each proposal will be submitted with the understanding that the acceptance to furnish any or all of the items described requires the execution of an Agreement between the Village and the Bidder.

Thereafter, Village staff will make its recommendation regarding contract award to the Village Council who will make the final decision at its December 13, 2016 Council Meeting.

INTERSTATE
Truck Bodies, Inc.

QUOTATION

Quote Number: MAM111716
Quote Date: Nov 17, 2016
Page: 1

Voice: 602-272-2298
Fax: 602-269-5021

Quoted To:

RAY SKELLINGTON
395 MAGNOLIA RD
PINEHURST, NC 28374
USA

1-910-638-5198

Customer ID	Good Thru	Payment Terms	Sales Rep
RAY SKELLINGTON	12/17/16	C.O.D.	MIKE MADDUX

Quantity	Description	Unit Price	Amount
1.00	NEW 2017 FREIGHTLINER M2-106 TANDEM AXLE CHASSIS CUMMINS ISL350 HP,ALLISON 3000 RDS AUTOMATIC TRANS 5:29 REAR RATIO. 18K FRONT AXLE, 40K REAR AXLE, AIRLINER EXTRA DUTY AIR RIDE SUSPENSION 315/80R22.5 FRONT TIRES WITH ALUM WHEELS 11R22.5 REAR TIRES WITH STEEL WHEELS 50 GALLON ALUM FUEL TANK,6 GALLON DEF TANK, RH VERTICAL EXHAUST CALIFORNIA CARB COMPLIANT ********** NEW 15' ITB 4000 GALLON WATER TANK SYSTEMS INSTALLED.(EXCEPTION 15' LONG 4000 GALLON TANK) 3/16" 304 STAINLESS STEEL SHELLS, HEADS AND BAFFLES WELDED 100% 2- 304 STAINLESS STEEL HORIZONTAL AND 1- LONGITUDINAL BAFFLES WELDED 100% 2-3/16" 304 STAINLESS SUB FRAME SUPPORTS 1- REAR MOUNTED SIGHT TUBE WITH SHUT OFF VALVES 1- FRONT MOUNTED SIGHT TUBE WITH SHUT OFF VALVES. 1/4" 304 STAINLESS STEEL BOX- SHAPED SUB FRAMES 2-3/4" X 3" RUBBER SKIRTBOARD STRIPS BETWEEN TANK SUBFRAME AND CHASSIS FRAME. 1- STAINLESS STEEL REAR OF TANK SAFETY LADDER WITH GRIP STRUT RUNGS. 4- AIR SPRAYS 2-FRONT, 2-SIDES. 6-3" IRON CLA-VAL STYLE AIR VALVES 2- AIR VALVES AT REAR FOR 8' CENTER SPRAY BAR & 1-8' DRIVERS SIDE AIR OPEN/CLOSE SPRAY ARM WITH BRASS CONE SPRAY NOZZLES SWITCHED FROM CAB. 2- FRONT ADJUSTABLE FAN SPRAYS	180,181.20	180,181.20

Subtotal	Continued
Sales Tax	Continued
TOTAL	**Continued**

INTERSTATE
Truck Bodies, Inc.

QUOTATION

Quote Number: MAM111716
Quote Date: Nov 17, 2016
Page: 2

Voice: 602-272-2298
Fax: 602-269-5021

Quoted To:

RAY SKELLINGTON
395 MAGNOLIA RD
PINEHURST, NC 28374
USA

1-910-638-5198

Customer ID	Good Thru	Payment Terms	Sales Rep
RAY SKELLINGTON	12/17/16	C.O.D.	MIKE MADDUX

Quantity	Description	Unit Price	Amount
	1- DRIVERS 1- PASSENGERS SIDE SPRAY ADJUSTABLE DUCKBILL SIDE SPRAY. 1-2 1/2" STAINLESS STEEL SCH 40 PIPE HYDRANT FILL PIPE WITH LEGAL AIR GAP 2-10 GUAGE 304 STAINLESS STEEL BONNET STYLE FENDERS. 1- 1/4" A-36 STEEL REAR BUMPER / DRIVERS SIDE SWING OUT ARM MOUNTING FRAME STRUCTURE. (2)-SPRING LOADED FRONT TANK MOUNTS 4- SOLID TANK MOUNTS. (1)-HOT SHIFT PTO 1-8 GALLON HYPRO HYDRALIC PUMP DRIVE SYSTEM WITH VARIABLE PUMP SPEED CONTROL. 1-ATP 4 X3 CENTRIFUGAL WATER PUMP WITH MECHANICAL SEAL 750 GAL AT 65 PSI 6-AIR SWITCH CONTROL PANEL HOSE REEL MOUNTING BRACKET INSTALLED ON PASSENGERS SIDE REAR HEAD. SAND BLAST EPOXY PRIME AND PAINT TANK EXTERIOR POLYURETHANE WHITE. LED STOP, TURN & BACK OF TANK. LIGHTS, MUD FLAPS,BACKUP ALARM REFLECTORS AND REFLECTIVE TAPE TO MEET DOT SPECIFICATIONS TOP REAR OF TANK AMBER LED BEACON. 1-1 1/2" X 50' MANUAL REWIND HOSE REEL W/ HOSE AND ADJ NOZZLE. FREIGHT TO PINEHURST N.C. 28374 INCLUDED IN QUOTE. FET INCLUDED IN QUOTE..		

Subtotal	180,181.20
Sales Tax	
TOTAL	**180,181.20**

INTERSTATE
Truck Bodies, Inc.

Truck Body Warranty

INTERTSTATE TRUCK BODIES, INC., (hereinafter called Interstate) warrants each new trailer, truck body and item of hydraulic equipment manufactured by it to be free from defects in material and workmanship under normal use and service with loads not exceeding the vehicle manufacturer's rated capacity for a period of 12 months after delivery to the original purchaser direct or by an authorized distributor.

Exclusions from Warranty. This Warranty shall not apply to:

(1) components manufactured by persons other than Interstate (such as hydraulic pumps, motors, valve, bearings, etc.) beyond warranty, if any, which may be made by such manufacturer,

(2) any unit which shall have been subject to misuse, negligence, alteration or accident or which shall have been repaired by anyone other than Interstate or its authorized service distributor in any way so as in the judgment of Interstate to affect adversely its performance or reliability, or

(3) normal maintenance services.

Purchaser's Exclusive Remedies. Interstate's sole obligation under this warranty will be to repair or replace, at its option, any warranted unit or part as described above which shall be returned to Interstate's factory or authorized service distributor and which examination shall disclose to Interstate's satisfaction to have been defective. Freight or other transportation costs to and from the factory or authorized service distributor must be paid by the purchaser. Interstate will not assume any charges for repairs made by anyone other than Interstate or its authorized service distributor.

Exclusion of other Warranties. No other warranty is made by Interstate and in particular Interstate makes **NO WARRANTY OF MERCHANTABILITY OR FITNESS FOR ANY PARTICULAR PURPOSE.** Interstate neither assumes nor authorizes any person to assume for it any liability other than described herein.

Limitations of Actions. Without extending the period of warranty stated above, any action for breach of warranty must be commenced within one year of the breached claimed or forever barred.

Limitation of Damages. The purchaser's remedy stated above shall be exclusive for any and all claims against Interstate whether based on contract, negligence, tort, or any other theory. In no event shall Interstate be liable for any consequential damages which may result from any defect or failure of a unit or part.

3215 W. LINCOLN STREET PHOENIX, AZ 85009
602-272-2289
602-484-0352 FAX
INTERSTATETRUCKBODIES.COM

INTERSTF
Truck Bodies, Inc.

REFERENCES:

MARICOPA COUNTY
STEVE SCHNEIDER
EQUIPMENT MANAGER
602-527-6296
PHOENIX, AZ

BRAVO UNDERGROUND
JOSE LEDON
PRESIDENT
702-314-4100
HENDERSON, NEVADA

NORTHERN PIPELINE CONSTRUCTION
CORY HOY
EQUIPMENT MANAGER
602-768-5010
GLENDALE, AZ

3215 W. LINCOLN STREET PHOENIX, AZ 85009
602-272-2298 602-484-0352 FAX

Prepared for:
MIKE ELLIS
SKYMARK REFUELERS, LLC
610 ADAMS STREET
KANSAS CITY, KS 66105
Phone: 913 653 8112

Prepared by:
Ron Donze
TRUCK CENTERS, INC.
2280 FORMOSA RD.
TROY, IL 62294
Phone: 618-667-3454

S P E C I F I C A T I O N P R O P O S A L

Data Code	Description	Weight Front	Weight Rear	Retail Price
Price Level				
PRL-14M	M2 PRL-14M (EFF:10/05/15)			STD
Data Version				
DRL-026	SPECPRO21 DATA RELEASE VER 026			N/C
Vehicle Configuration				
001-172	M2 106 CONVENTIONAL CHASSIS	5,759	3,503	$98,616.00
004-217	2017 MODEL YEAR SPECIFIED			STD
002-004	SET BACK AXLE - TRUCK			STD
019-002	STRAIGHT TRUCK PROVISION			STD
003-001	LH PRIMARY STEERING LOCATION			STD
General Service				
AA1-002	TRUCK CONFIGURATION			STD
AA6-001	DOMICILED, USA 50 STATES (INCLUDING CALIFORNIA AND CARB OPT-IN STATES)			N/C
A85-002	PICKUP AND DELIVERY/SHORT HAUL SERVICE			STD
A84-1SE	SERVICES BUSINESS SEGMENT			N/C
AA4-002	LIQUID BULK COMMODITY			N/C
AA5-002	TERRAIN/DUTY: 100% (ALL) OF THE TIME, IN TRANSIT, IS SPENT ON PAVED ROADS			STD
AB1-008	MAXIMUM 8% EXPECTED GRADE			STD
AB5-001	SMOOTH CONCRETE OR ASPHALT PAVEMENT - MOST SEVERE IN-TRANSIT (BETWEEN SITES) ROAD SURFACE			STD
995-091	MEDIUM TRUCK WARRANTY			STD
A66-99D	EXPECTED FRONT AXLE(S) LOAD : 18000.0 lbs			
A68-99D	EXPECTED REAR DRIVE AXLE(S) LOAD : 40000.0 lbs			
A63-99D	EXPECTED GROSS VEHICLE WEIGHT CAPACITY : 58000.0 lbs			
Truck Service				

Prepared for:
MIKE ELLIS
SKYMARK REFUELERS, LLC
610 ADAMS STREET
KANSAS CITY, KS 66105
Phone: 913 653 8112

Prepared by:
Ron Donze
TRUCK CENTERS, INC.
2280 FORMOSA RD.
TROY, IL 62294
Phone: 618-667-3454

Data Code	Description	Weight Front	Weight Rear	Retail Price
AA3-003	TANK BODY			N/C
A88-99D	EXPECTED TRUCK BODY LENGTH : 0.0 ft			
AF7-99D	EXPECTED BODY/PAYLOAD CG HEIGHT ABOVE FRAME "XX" INCHES : 32.0 in			
Engine				
101-2XM	CUM ISL 350 HP @ 2000 RPM, 2200 GOV RPM, 1000 LB/FT @ 1400 RPM	640	30	$13,792.00
Electronic Parameters				
79A-075	75 MPH ROAD SPEED LIMIT			N/C
79B-000	CRUISE CONTROL SPEED LIMIT SAME AS ROAD SPEED LIMIT			N/C
79K-007	PTO MODE ENGINE RPM LIMIT - 1100 RPM			N/C
79P-002	PTO RPM WITH CRUISE SET SWITCH - 700 RPM			N/C
79Q-003	PTO RPM WITH CRUISE RESUME SWITCH - 800 RPM			N/C
79S-001	PTO MODE CANCEL VEHICLE SPEED - 5 MPH			N/C
79U-007	PTO GOVERNOR RAMP RATE - 250 RPM PER SECOND			N/C
79W-001	ONE REMOTE PTO SPEED			N/C
79X-007	REMOTE PTO SPEED 1 SETTING - 1000 RPM			N/C
80G-002	PTO MINIMUM RPM - 700			N/C
80J-002	REGEN INHIBIT SPEED THRESHOLD - 5 MPH			N/C
Engine Equipment				
99C-016	2016 ONBOARD DIAGNOSTICS/2010 EPA/CARB/GHG17 BUT NOT FINAL GHG17 CONFIGURATION			STD
99D-009	2008 CARB EMISSION CERTIFICATION - CLEAN IDLE (INCLUDES 6X4 INCH LABEL ON LEFT SIDE OF HOOD)			$106.00
13E-001	STANDARD OIL PAN			STD
105-001	ENGINE MOUNTED OIL CHECK AND FILL			STD
133-004	ONE PIECE VALVE COVER			STD
014-099	SIDE OF HOOD AIR INTAKE WITH FIREWALL MOUNTED DONALDSON AIR CLEANER			STD
124-1D7	DR 12V 160 AMP 28-SI QUADRAMOUNT PAD ALTERNATOR WITH REMOTE BATTERY VOLT SENSE			STD
292-098	(2) ALLIANCE MODEL 1231, GROUP 31, 12 VOLT MAINTENANCE FREE 2250 CCA THREADED STUD BATTERIES			$41.00
290-017	BATTERY BOX FRAME MOUNTED			STD
281-001	STANDARD BATTERY JUMPERS			STD

Prepared for:
MIKE ELLIS
SKYMARK REFUELERS, LLC
610 ADAMS STREET
KANSAS CITY, KS 66105
Phone: 913 653 8112

Prepared by:
Ron Donze
TRUCK CENTERS, INC.
2280 FORMOSA RD.
TROY, IL 62294
Phone: 618-667-3454

Data Code	Description	Weight Front	Weight Rear	Retail Price
282-001	SINGLE BATTERY BOX FRAME MOUNTED LH SIDE UNDER CAB			STD
291-017	WIRE GROUND RETURN FOR BATTERY CABLES WITH ADDITIONAL FRAME GROUND RETURN			STD
289-001	NON-POLISHED BATTERY BOX COVER			STD
107-032	CUMMINS TURBOCHARGED 18.7 CFM AIR COMPRESSOR WITH INTERNAL SAFETY VALVE			STD
108-002	STANDARD MECHANICAL AIR COMPRESSOR GOVERNOR			STD
131-013	AIR COMPRESSOR DISCHARGE LINE			STD
152-041	ELECTRONIC ENGINE INTEGRAL SHUTDOWN PROTECTION SYSTEM			STD
128-076	CUMMINS EXHAUST BRAKE INTEGRAL WITH VARIABLE GEOMETRY TURBO WITH ON/OFF DASH SWITCH	20		N/C
016-1C2	RH OUTBOARD UNDER STEP MOUNTED HORIZONTAL AFTERTREATMENT SYSTEM ASSEMBLY WITH RH B-PILLAR MOUNTED VERTICAL TAILPIPE	30	25	$852.00
28F-002	ENGINE AFTERTREATMENT DEVICE, AUTOMATIC OVER THE ROAD REGENERATION AND DASH MOUNTED REGENERATION REQUEST SWITCH			STD
239-038	11 FOOT 06 INCH (138 INCH+0/-5.9 INCH) EXHAUST SYSTEM HEIGHT			N/C
237-1CR	RH CURVED VERTICAL TAILPIPE B-PILLAR MOUNTED ROUTED FROM STEP			N/C
23U-001	6 GALLON DIESEL EXHAUST FLUID TANK			STD
30N-003	100 PERCENT DIESEL EXHAUST FLUID FILL			STD
43X-002	LH MEDIUM DUTY STANDARD DIESEL EXHAUST FLUID TANK LOCATION			STD
23Y-001	STANDARD DIESEL EXHAUST FLUID PUMP MOUNTING			STD
43Y-001	STANDARD DIESEL EXHAUST FLUID TANK CAP			STD
242-011	ALUMINUM AFTERTREATMENT DEVICE/MUFFLER/TAILPIPE SHIELD(S)			N/C
273-018	HORTON DRIVEMASTER ADVANTAGE ON/OFF FAN DRIVE			N/C
276-001	AUTOMATIC FAN CONTROL WITHOUT DASH SWITCH, NON ENGINE MOUNTED			STD
110-003	CUMMINS SPIN ON FUEL FILTER			STD
118-008	COMBINATION FULL FLOW/BYPASS OIL FILTER			N/C
266-013	1100 SQUARE INCH ALUMINUM RADIATOR	20		N/C
103-039	ANTIFREEZE TO -34F, OAT (NITRITE AND SILICATE FREE) EXTENDED LIFE COOLANT			STD

Prepared for:
MIKE ELLIS
SKYMARK REFUELERS, LLC
610 ADAMS STREET
KANSAS CITY, KS 66105
Phone: 913 653 8112

Prepared by:
Ron Donze
TRUCK CENTERS, INC.
2280 FORMOSA RD.
TROY, IL 62294
Phone: 618-667-3454

Data Code	Description	Weight Front	Weight Rear	Retail Price
171-007	GATES BLUE STRIPE COOLANT HOSES OR EQUIVALENT			STD
172-001	CONSTANT TENSION HOSE CLAMPS FOR COOLANT HOSES			STD
270-016	RADIATOR DRAIN VALVE			STD
168-002	LOWER RADIATOR GUARD			STD
138-011	PHILLIPS-TEMRO 1000 WATT/115 VOLT BLOCK HEATER	4		$99.00
140-053	BLACK PLASTIC ENGINE HEATER RECEPTACLE MOUNTED UNDER LH DOOR			N/C
134-001	ALUMINUM FLYWHEEL HOUSING			STD
132-004	ELECTRIC GRID AIR INTAKE WARMER			STD
155-058	DELCO 12V 38MT HD STARTER WITH INTEGRATED MAGNETIC SWITCH			N/C
Transmission				
342-582	ALLISON 3000 RDS AUTOMATIC TRANSMISSION WITH PTO PROVISION	200	60	$6,785.00
Transmission Equipment				
343-313	ALLISON VOCATIONAL PACKAGE 145 - AVAILABLE ON 3000/4000 PRODUCT FAMILIES WITH VOCATIONAL MODEL RDS			N/C
84B-012	ALLISON VOCATIONAL RATING FOR ON/OFF HIGHWAY APPLICATIONS AVAILABLE WITH ALL PRODUCT FAMILIES			N/C
84C-023	PRIMARY MODE GEARS, LOWEST GEAR 1, START GEAR 1, HIGHEST GEAR 6, AVAILABLE FOR 3000/4000 PRODUCT FAMILIES ONLY			N/C
84D-023	SECONDARY MODE GEARS, LOWEST GEAR 1, START GEAR 1, HIGHEST GEAR 6, AVAILABLE FOR 3000/4000 PRODUCT FAMILIES ONLY			N/C
84N-000	NEUTRAL AT STOP - DISABLED, FUELSENSE - DISABLED			STD
84U-000	DRIVER SWITCH INPUT - DEFAULT - NO SWITCHES			STD
353-022	VEHICLE INTERFACE WIRING CONNECTOR WITHOUT BLUNT CUTS, AT BACK OF CAB			$43.00
34C-001	ELECTRONIC TRANSMISSION CUSTOMER ACCESS CONNECTOR FIREWALL MOUNTED			$38.00
362-1Y0	(2) CUSTOMER INSTALLED CHELSEA 277 SERIES PTO'S			N/C
363-011	PTO MOUNTING, LH AND RH SIDES OF MAIN TRANSMISSION			N/C
341-018	MAGNETIC PLUGS, ENGINE DRAIN, TRANSMISSION DRAIN, AXLE(S) FILL AND DRAIN			STD

Prepared for:
MIKE ELLIS
SKYMARK REFUELERS, LLC
610 ADAMS STREET
KANSAS CITY, KS 66105
Phone: 913 653 8112

Prepared by:
Ron Donze
TRUCK CENTERS, INC.
2280 FORMOSA RD.
TROY, IL 62294
Phone: 618-667-3454

Data Code	Description	Weight Front	Weight Rear	Retail Price
345-003	PUSH BUTTON ELECTRONIC SHIFT CONTROL, DASH MOUNTED			N/C
97G-004	TRANSMISSION PROGNOSTICS - ENABLED 2013			N/C
370-015	WATER TO OIL TRANSMISSION COOLER, IN RADIATOR END TANK			STD
346-003	TRANSMISSION OIL CHECK AND FILL WITH ELECTRONIC OIL LEVEL CHECK			N/C
35T-001	SYNTHETIC TRANSMISSION FLUID (TES-295 COMPLIANT)			STD
Front Axle and Equipment				
400-1BA	DETROIT DA-F-18.0-5 18,000# FL1 71.0 KPI/3.74 DROP SINGLE FRONT AXLE	210		$2,196.00
402-030	MERITOR 16.5X6 Q+ CAST SPIDER CAM FRONT BRAKES, DOUBLE ANCHOR, FABRICATED SHOES	10		N/C
403-002	NON-ASBESTOS FRONT BRAKE LINING			STD
419-023	CONMET CAST IRON FRONT BRAKE DRUMS			STD
409-021	SKF SCOTSEAL PLUS XL FRONT OIL SEALS			STD
408-001	VENTED FRONT HUB CAPS WITH WINDOW, CENTER AND SIDE PLUGS - OIL			STD
416-022	STANDARD SPINDLE NUTS FOR ALL AXLES			STD
405-002	MERITOR AUTOMATIC FRONT SLACK ADJUSTERS			STD
536-012	TRW TAS-85 POWER STEERING	40		N/C
539-003	POWER STEERING PUMP			STD
534-015	2 QUART SEE THROUGH POWER STEERING RESERVOIR			STD
40T-001	ORGANIC SAE 80/90 FRONT AXLE LUBE			STD
Front Suspension				
620-013	18,000# TAPERLEAF FRONT SUSPENSION	200		$1,428.00
619-004	GRAPHITE BRONZE BUSHINGS WITH SEALS - FRONT SUSPENSION			($565.00)
62H-998	NO FRONT SUSPENSION SPRING BRACKET OPTIONS			STD
410-001	FRONT SHOCK ABSORBERS			STD
Rear Axle and Equipment				
420-1K3	MT-40-14X 40,000# R-SERIES TANDEM REAR AXLE		2,500	$10,037.00
421-529	5.29 REAR AXLE RATIO			$147.00
424-001	IRON REAR AXLE CARRIER WITH STANDARD AXLE HOUSING			STD
386-074	MXL 176T MERITOR EXTENDED LUBE MAIN DRIVELINE WITH HALF ROUND YOKES	25	25	$20.00

Prepared for:
MIKE ELLIS
SKYMARK REFUELERS, LLC
610 ADAMS STREET
KANSAS CITY, KS 66105
Phone: 913 653 8112

Prepared by:
Ron Donze
TRUCK CENTERS, INC.
2280 FORMOSA RD.
TROY, IL 62294
Phone: 618-667-3454

Data Code	Description	Weight Front	Weight Rear	Retail Price
388-073	MXL 17T MERITOR EXTENDED LUBE INTERAXLE DRIVELINE WITH HALF ROUND YOKES			N/C
452-006	DRIVER CONTROLLED TRACTION DIFFERENTIAL - BOTH TANDEM REAR AXLES		30	$1,423.00
878-023	(1) INTERAXLE LOCK VALVE, (1) DRIVER CONTROLLED DIFFERENTIAL LOCK FORWARD-REAR AND REAR-REAR AXLE VALVE			N/C
87A-001	BLINKING LAMP WITH EACH INTERAXLE LOCK SWITCH, INTERAXLE UNLOCK DEFAULT WITH IGNITION OFF			N/C
87B-004	BLINKING LAMP WITH EACH MODE SWITCH, DIFFERENTIAL UNLOCK WITH IGNITION OFF, ACTIVE <5 MPH			N/C
423-020	MERITOR 16.5X7 Q+ CAST SPIDER CAM REAR BRAKES, DOUBLE ANCHOR, FABRICATED SHOES			$22.00
433-002	NON-ASBESTOS REAR BRAKE LINING			STD
434-005	BRAKE CAMS AND CHAMBERS ON FORWARD SIDE OF DRIVE AXLE(S) WITH AUXILIARY SUPPORT BRACKETS			STD
451-023	CONMET CAST IRON REAR BRAKE DRUMS			STD
440-021	SKF SCOTSEAL PLUS XL REAR OIL SEALS			STD
426-075	HALDEX GOLDSEAL LONGSTROKE 2-DRIVE AXLES SPRING PARKING CHAMBERS		20	N/C
428-002	MERITOR AUTOMATIC REAR SLACK ADJUSTERS			STD
41T-001	ORGANIC SAE 80/90 REAR AXLE LUBE			STD
Rear Suspension				
622-218	AIRLINER 40,000# EXTRA DUTY REAR SUSPENSION		180	$1,272.00
621-007	AIRLINER HIGH POSITION RIDE HEIGHT			STD
431-005	RESTRAINED AXLE SEATS IN AXLE CLAMP GROUP			N/C
624-016	51 INCH AXLE SPACING			N/C
910-001	SINGLE AIR REAR SUSPENSION LEVELING VALVE			STD
623-002	TRANSVERSE CONTROL RODS			STD
439-005	REAR SHOCK ABSORBERS - TWO AXLES (TANDEM) (AIR RIDE SUSPENSION)			N/C
Brake System				
018-002	AIR BRAKE PACKAGE			STD
490-100	WABCO 4S/4M ABS WITHOUT TRACTION CONTROL			STD
871-001	REINFORCED NYLON, FABRIC BRAID AND WIRE BRAID CHASSIS AIR LINES			STD

Data Code	Description	Weight Front	Weight Rear	Retail Price
904-001	FIBER BRAID PARKING BRAKE HOSE			STD
412-001	STANDARD BRAKE SYSTEM VALVES			STD
46D-002	STANDARD AIR SYSTEM PRESSURE PROTECTION SYSTEM			STD
413-002	STD U.S. FRONT BRAKE VALVE			STD
432-003	RELAY VALVE WITH 5-8 PSI CRACK PRESSURE, NO REAR PROPORTIONING VALVE			STD
480-086	BW AD-9SI BRAKE LINE AIR DRYER WITH HEATER			N/C
479-012	AIR DRYER MOUNTED UNDER HOOD			N/C
460-008	STEEL AIR BRAKE RESERVOIRS MOUNTED INSIDE RAIL			$4.00
607-001	CLEAR FRAME RAILS FROM BACK OF CAB TO FRONT REAR SUSPENSION BRACKET, BOTH RAILS OUTBOARD			$63.00
477-001	PULL CABLE ON WET TANK, PETCOCK DRAIN VALVES ON ALL OTHER AIR TANKS			STD
Trailer Connections				
335-004	UPGRADED CHASSIS MULTIPLEXING UNIT			STD
32A-002	UPGRADED BULKHEAD MULTIPLEXING UNIT			STD
30L-998	NO HIGH CURRENT TRAILER/BODY CABLE			STD
Wheelbase & Frame				
545-565	5650MM (222 INCH) WHEELBASE			N/C
546-102	7/16X3-9/16X11-1/8 INCH STEEL FRAME (11.11MMX282.6MM/0.437X11.13 INCH) 120KSI	370	290	$954.00
552-007	2450MM (96 INCH) REAR FRAME OVERHANG			N/C
55W-009	FRAME OVERHANG RANGE: 91 INCH TO 100 INCH	-50	210	N/C
AC8-99D	CALC'D BACK OF CAB TO REAR SUSP C/L (CA) : 156.45 in			
AE8-99D	CALCULATED EFFECTIVE BACK OF CAB TO REAR SUSPENSION C/L (CA) : 153.45 in			
AE4-99D	CALC'D FRAME LENGTH - OVERALL : 347.39			
AM6-99D	CALC'D SPACE AVAILABLE FOR DECKPLATE : 156.45 in			
FSS-0LH	CALCULATED FRAME SPACE LH SIDE : 106.35 in			N/C
FSS-0RH	CALCULATED FRAME SPACE RH SIDE : 127.95 in			N/C
553-001	SQUARE END OF FRAME			STD
550-001	FRONT CLOSING CROSSMEMBER			STD
559-003	LIGHTWEIGHT HEAVY DUTY ALUMINUM ENGINE CROSSMEMBER	-12		$51.00

Prepared for:
MIKE ELLIS
SKYMARK REFUELERS, LLC
610 ADAMS STREET
KANSAS CITY, KS 66105
Phone: 913 653 8112

Prepared by:
Ron Donze
TRUCK CENTERS, INC.
2280 FORMOSA RD.
TROY, IL 62294
Phone: 618-667-3454

Data Code	Description	Weight Front	Weight Rear	Retail Price
562-001	STANDARD MIDSHIP #1 CROSSMEMBER(S)			STD
572-001	STANDARD REARMOST CROSSMEMBER			STD
565-002	HEAVY DUTY SUSPENSION CROSSMEMBER		30	N/C
Chassis Equipment				
556-1AP	THREE-PIECE 14 INCH PAINTED STEEL BUMPER WITH COLLAPSIBLE ENDS	30		$76.00
558-001	FRONT TOW HOOKS - FRAME MOUNTED	15		$96.00
574-001	BUMPER MOUNTING FOR SINGLE LICENSE PLATE			STD
586-024	FENDER AND FRONT OF HOOD MOUNTED FRONT MUDFLAPS			STD
551-007	GRADE 8 THREADED HEX HEADED FRAME FASTENERS			STD
970-040	TANK BODY 3001 TO 4500 GALLONS			N/C
Fuel Tanks				
204-215	50 GALLON/189 LITER SHORT RECTANGULAR ALUMINUM FUEL TANK - LH	20		$133.00
218-005	RECTANGULAR FUEL TANK(S)			STD
215-005	PLAIN ALUMINUM/PAINTED STEEL FUEL/HYDRAULIC TANK(S) WITH PAINTED BANDS			STD
212-007	FUEL TANK(S) FORWARD			STD
664-001	PLAIN STEP FINISH			STD
205-001	FUEL TANK CAP(S)			STD
122-077	ALLIANCE FUEL FILTER/WATER SEPARATOR WITH HEATED BOWL AND PRIMER PUMP			$75.00
216-020	EQUIFLO INBOARD FUEL SYSTEM			STD
202-016	HIGH TEMPERATURE REINFORCED NYLON FUEL LINE			STD
Tires				
093-0TD	MICHELIN XZY-3 315/80R22.5 20 PLY RADIAL FRONT TIRES	80		$570.00
094-0DH	MICHELIN XDE M/S 11R22.5 14 PLY RADIAL REAR TIRES		56	($120.00)
Hubs				
418-056	CONMET PRESET PLUS IRON FRONT HUBS			STD
450-056	CONMET PRESET PLUS IRON REAR HUBS			STD
Wheels				
502-1M3	ALCOA 89465X 22.5X9.00 10-HUB PILOT 5.96 INSET ALUMINUM DISC FRONT WHEELS	-40		$464.00
505-524	MAXION WHEELS 90541 22.5X8.25 10-HUB PILOT 2-HAND STEEL DISC REAR WHEELS			N/C

Prepared for:
MIKE ELLIS
SKYMARK REFUELERS, LLC
610 ADAMS STREET
KANSAS CITY, KS 66105
Phone: 913 653 8112

Prepared by:
Ron Donze
TRUCK CENTERS, INC.
2280 FORMOSA RD.
TROY, IL 62294
Phone: 618-667-3454

Data Code	Description	Weight Front	Weight Rear	Retail Price
524-001	POLISHED FRONT WHEELS; OUTSIDE ONLY			$42.00
496-011	FRONT WHEEL MOUNTING NUTS			STD
497-011	REAR WHEEL MOUNTING NUTS			STD
498-009	WHEEL STUDS FOR CUSTOMER INSTALLED HUB PILOTED DUALED ALUMINUM WHEELS			N/C
Cab Exterior				
829-071	106 INCH BBC FLAT ROOF ALUMINUM CONVENTIONAL CAB			STD
650-008	AIR CAB MOUNTS			$118.00
754-008	2-1/2 INCH FENDER EXTENSIONS	10		$253.00
678-002	LH GRAB HANDLE			($25.00)
646-023	HOOD MOUNTED CHROMED PLASTIC GRILLE			$97.00
65X-001	ARGENT SILVER HOOD MOUNTED AIR INTAKE GRILLE			STD
644-004	FIBERGLASS HOOD			STD
727-1AH	SINGLE 14 INCH ROUND POLISHED AIR HORN ROOF MOUNTED	4		$136.00
726-001	SINGLE ELECTRIC HORN			STD
728-001	SINGLE HORN SHIELD			N/C
657-001	DOOR LOCKS AND IGNITION SWITCH KEYED THE SAME			STD
575-001	REAR LICENSE PLATE MOUNT END OF FRAME			STD
312-038	INTEGRAL HEADLIGHT/MARKER ASSEMBLY WITH CHROME BEZEL			N/C
302-001	(5) AMBER MARKER LIGHTS			STD
311-001	DAYTIME RUNNING LIGHTS			$21.00
294-001	INTEGRAL STOP/TAIL/BACKUP LIGHTS			STD
300-015	STANDARD FRONT TURN SIGNAL LAMPS			STD
744-1BG	DUAL WEST COAST MOLDED-IN COLOR HEATED MIRRORS			$99.00
797-001	DOOR MOUNTED MIRRORS			STD
796-001	102 INCH EQUIPMENT WIDTH			STD
743-1AP	LH AND RH 8 INCH MOLDED-IN COLOR CONVEX MIRRORS M0UNTED UNDER PRIMARY MIRRORS			N/C
729-001	STANDARD SIDE/REAR REFLECTORS			STD
275-063	2-STAGE ELECTRIC HORN AND HAZARD LAMP ALERT CONTROLLED BY PARTICULATE FILTER REGENERATION REQUIRED STATUS			N/C
768-043	63X14 INCH TINTED REAR WINDOW			STD
661-003	TINTED DOOR GLASS LH AND RH WITH TINTED NON-OPERATING WING WINDOWS			STD

Prepared for:
MIKE ELLIS
SKYMARK REFUELERS, LLC
610 ADAMS STREET
KANSAS CITY, KS 66105
Phone: 913 653 8112

Prepared by:
Ron Donze
TRUCK CENTERS, INC.
2280 FORMOSA RD.
TROY, IL 62294
Phone: 618-667-3454

Data Code	Description	Weight Front	Weight Rear	Retail Price
654-003	MANUAL DOOR WINDOW REGULATORS			STD
663-013	TINTED WINDSHIELD			STD
659-019	2 GALLON WINDSHIELD WASHER RESERVOIR WITHOUT FLUID LEVEL INDICATOR, FRAME MOUNTED			STD
Cab Interior				
707-1AK	OPAL GRAY VINYL INTERIOR			N/C
706-013	MOLDED PLASTIC DOOR PANEL			STD
708-013	MOLDED PLASTIC DOOR PANEL			STD
772-006	BLACK MATS WITH SINGLE INSULATION			STD
785-001	DASH MOUNTED ASH TRAYS AND LIGHTER			$12.00
691-008	FORWARD ROOF MOUNTED CONSOLE WITH UPPER STORAGE COMPARTMENTS WITHOUT NETTING			STD
694-010	IN DASH STORAGE BIN			STD
742-007	(2) CUP HOLDERS LH AND RH DASH			STD
680-006	GRAY/CHARCOAL FLAT DASH			STD
860-004	SMART SWITCH EXPANSION MODULE			$189.00
700-002	HEATER, DEFROSTER AND AIR CONDITIONER			STD
701-001	STANDARD HVAC DUCTING			STD
703-005	MAIN HVAC CONTROLS WITH RECIRCULATION SWITCH			STD
170-015	STANDARD HEATER PLUMBING			STD
130-033	DENSO HEAVY DUTY AIR CONDITIONER COMPRESSOR			STD
702-002	BINARY CONTROL, R-134A			STD
739-034	PREMIUM INSULATION			$173.00
285-013	SOLID-STATE CIRCUIT PROTECTION AND FUSES			STD
280-007	12V NEGATIVE GROUND ELECTRICAL SYSTEM			STD
324-014	DOME LIGHT WITH 3-WAY SWITCH ACTIVATED BY LH AND RH DOORS			STD
655-001	CAB DOOR LATCHES WITH MANUAL DOOR LOCKS			STD
756-1J3	BASIC HIGH BACK AIR SUSPENSION DRIVER SEAT WITH MECHANICAL LUMBAR AND INTEGRATED CUSHION EXTENSION	30		$212.00
760-1DC	BASIC HIGH BACK NON SUSPENSION PASSENGER SEAT			STD
711-004	LH AND RH INTEGRAL DOOR PANEL ARMRESTS			STD
758-036	VINYL WITH VINYL INSERT DRIVER SEAT			STD
761-036	VINYL WITH VINYL INSERT PASSENGER SEAT			STD

Prepared for:
MIKE ELLIS
SKYMARK REFUELERS, LLC
610 ADAMS STREET
KANSAS CITY, KS 66105
Phone: 913 653 8112

Prepared by:
Ron Donze
TRUCK CENTERS, INC.
2280 FORMOSA RD.
TROY, IL 62294
Phone: 618-667-3454

Data Code	Description	Weight Front	Weight Rear	Retail Price
763-032	3 POINT FIXED D-RING RETRACTOR DRIVER AND PASSENGER SEAT BELTS			STD
532-001	FIXED STEERING COLUMN			STD
540-015	4-SPOKE 18 INCH (450MM) STEERING WHEEL			STD
765-002	DRIVER AND PASSENGER INTERIOR SUN VISORS			STD
Instruments & Controls				
732-004	GRAY DRIVER INSTRUMENT PANEL			STD
734-004	GRAY CENTER INSTRUMENT PANEL			STD
87L-001	ENGINE REMOTE INTERFACE WITH PARK BRAKE INTERLOCK			N/C
870-001	BLACK GAUGE BEZELS			STD
486-001	LOW AIR PRESSURE INDICATOR LIGHT AND AUDIBLE ALARM			STD
840-002	2 INCH PRIMARY AND SECONDARY AIR PRESSURE GAUGES			STD
198-025	INTAKE MOUNTED AIR RESTRICTION INDICATOR WITHOUT GRADUATIONS			STD
149-013	ELECTRONIC CRUISE CONTROL WITH SWITCHES IN LH SWITCH PANEL			STD
156-007	KEY OPERATED IGNITION SWITCH AND INTEGRAL START POSITION; 4 POSITION OFF/RUN/START/ACCESSORY			STD
811-042	ICU3S, 132X48 DISPLAY WITH DIAGNOSTICS, 28 LED WARNING LAMPS AND DATA LINKED			STD
160-038	HEAVY DUTY ONBOARD DIAGNOSTICS INTERFACE CONNECTOR LOCATED BELOW LH DASH			STD
844-001	2 INCH ELECTRIC FUEL GAUGE			STD
148-074	ENGINE REMOTE INTERFACE NOT CONFIGURED			$85.00
163-001	ENGINE REMOTE INTERFACE CONNECTOR AT BACK OF CAB			N/C
856-001	ELECTRICAL ENGINE COOLANT TEMPERATURE GAUGE			STD
864-005	TRANSMISSION OIL TEMPERATURE INDICATOR LIGHT			STD
830-017	ENGINE AND TRIP HOUR METERS INTEGRAL WITHIN DRIVER DISPLAY			STD
372-051	CUSTOMER FURNISHED AND INSTALLED PTO CONTROLS			N/C
73B-998	NO LANE DEPARTURE WARNING SYSTEM			STD
852-002	ELECTRIC ENGINE OIL PRESSURE GAUGE			STD

Prepared for:
MIKE ELLIS
SKYMARK REFUELERS, LLC
610 ADAMS STREET
KANSAS CITY, KS 66105
Phone: 913 653 8112

Prepared by:
Ron Donze
TRUCK CENTERS, INC.
2280 FORMOSA RD.
TROY, IL 62294
Phone: 618-667-3454

Data Code	Description	Weight Front	Weight Rear	Retail Price
746-1B3	AM/FM/WB RADIO WITH BLUETOOTH AND MICROPHONE, FRONT USB PORT, FRONT AND REAR AUXILIARY INPUTS AND J1939	10		$398.00
747-001	DASH MOUNTED RADIO			N/C
750-002	(2) RADIO SPEAKERS IN CAB			N/C
753-001	AM/FM ANTENNA MOUNTED ON FORWARD LH ROOF			N/C
810-027	ELECTRONIC MPH SPEEDOMETER WITH SECONDARY KPH SCALE, WITHOUT ODOMETER			STD
817-001	STANDARD VEHICLE SPEED SENSOR			STD
812-001	ELECTRONIC 3000 RPM TACHOMETER			STD
162-002	IGNITION SWITCH CONTROLLED ENGINE STOP			N/C
81Y-001	PRE-TRIP LAMP INSPECTION, ALL OUTPUTS FLASH, WITH SMART SWITCH			$12.00
836-015	DIGITAL VOLTAGE DISPLAY INTEGRAL WITH DRIVER DISPLAY			STD
660-008	SINGLE ELECTRIC WINDSHIELD WIPER MOTOR WITH DELAY			STD
304-001	MARKER LIGHT SWITCH INTEGRAL WITH HEADLIGHT SWITCH			STD
882-009	ONE VALVE PARKING BRAKE SYSTEM WITH WARNING INDICATOR			STD
299-013	SELF CANCELING TURN SIGNAL SWITCH WITH DIMMER, WASHER/WIPER AND HAZARD IN HANDLE			STD
298-039	INTEGRAL ELECTRONIC TURN SIGNAL FLASHER WITH HAZARD LAMPS OVERRIDING STOP LAMPS			STD
869-998	NO MISCELLANEOUS GAUGES			STD
Design				
065-000	PAINT: ONE SOLID COLOR			STD
Color				
980-5F6	CAB COLOR A: L0006EB WHITE ELITE BC			STD
986-020	BLACK, HIGH SOLIDS POLYURETHANE CHASSIS PAINT			STD
98K-998	NO FUEL TANK CABINET PAINT			STD
966-972	POWDER WHITE (N0006EA) REAR WHEELS/RIMS (PKWHT21, TKWHT21, W, TW)			STD
964-6Z7	BUMPER PAINT: FP24812 ARGENT SILVER DUPONT FLEX			STD
963-003	STANDARD E COAT/UNDERCOATING			STD
Certification / Compliance				

Prepared for:
MIKE ELLIS
SKYMARK REFUELERS, LLC
610 ADAMS STREET
KANSAS CITY, KS 66105
Phone: 913 653 8112

Prepared by:
Ron Donze
TRUCK CENTERS, INC.
2280 FORMOSA RD.
TROY, IL 62294
Phone: 618-667-3454

Data Code	Description	Weight Front	Weight Rear	Retail Price
996-001	U.S. FMVSS CERTIFICATION, EXCEPT SALES CABS AND GLIDER KITS			STD

Secondary Factory Options

998-001	CORPORATE PDI CENTER IN-SERVICE ONLY			N/C

Sales Programs

NO SALES PROGRAMS HAVE BEEN SELECTED

TOTAL VEHICLE SUMMARY

Adjusted List Price

Adjusted List Price ** $140,540.00

Weight Summary

	Weight Front	Weight Rear	Total Weight
Factory Weight+	7625 lbs	6959 lbs	14584 lbs
Total Weight+	7625 lbs	6959 lbs	14584 lbs

ITEMS NOT INCLUDED IN ADJUSTED LIST PRICE

Other Factory Charges

PMU-016	2016 OBD/2010 EPA/CARB/GHG14 ESCALATOR	$300.00
P73-2FT	STANDARD DESTINATION CHARGE	$2,000.00

Extended Warranty

WAG-010	TOWING: 1 YEAR/UNLIMITED MILES/KM EXTENDED TOWING COVERAGE $550 CAP	$200.00

Currency Exchange Rate 1.0000

Prepared for:
MIKE ELLIS
SKYMARK REFUELERS, LLC
610 ADAMS STREET
KANSAS CITY, KS 66105
Phone: 913 653 8112

Prepared by:
Ron Donze
TRUCK CENTERS, INC.
2280 FORMOSA RD.
TROY, IL 62294
Phone: 618-667-3454

Total Extended Warranty (Local Currency)	$200.00

(+) Weights shown are estimates only.
If weight is critical, contact Customer Application Engineering.
(**) Prices shown do not include taxes, fees, etc... "Net Equipment Selling Price" is located on the Quotation Details Proposal Report.

Prepared for:
MIKE ELLIS
SKYMARK REFUELERS, LLC
610 ADAMS STREET
KANSAS CITY, KS 66105
Phone: 913 653 8112

Prepared by:
Ron Donze
TRUCK CENTERS, INC.
2280 FORMOSA RD.
TROY, IL 62294
Phone: 618-667-3454

DIMENSIONS

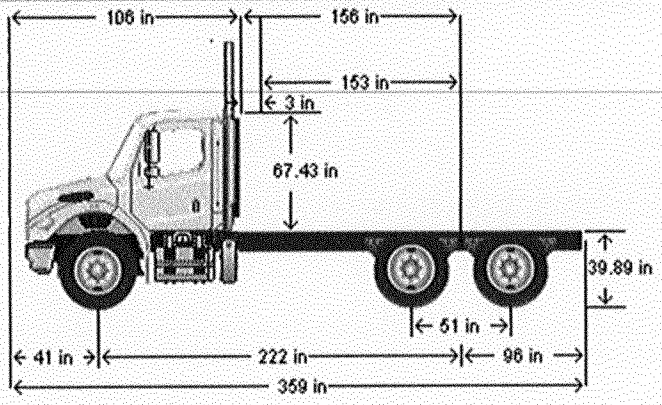

VEHICLE SPECIFICATIONS SUMMARY - DIMENSIONS

Model M2106
Wheelbase (545) ..... 5650MM (222 INCH) WHEELBASE
Rear Frame Overhang (552) ..... 2450MM (96 INCH) REAR FRAME OVERHANG
Fifth Wheel (578) ..... NO FIFTH WHEEL
- Mounting Location (577) ..... NO FIFTH WHEEL LOCATION
- Maximum Forward Position (in) 0
- Maximum Rearward Position (in) 0
- Amount of Slide Travel (in) 0
- Slide Increment (in) 0
- Desired Slide Position (in) 0.0

Cab Size (829) ..... 106 INCH BBC FLAT ROOF ALUMINUM CONVENTIONAL CAB
Sleeper (682) ..... NO SLEEPER BOX/SLEEPERCAB
Exhaust System (016) ..... RH OUTBOARD UNDER STEP MOUNTED HORIZONTAL AFTERTREATMENT SYSTEM ASSEMBLY WITH RH B-PILLAR MOUNTED VERTICAL TAILPIPE

TABLE SUMMARY - DIMENSIONS

Prepared for:
MIKE ELLIS
SKYMARK REFUELERS, LLC
610 ADAMS STREET
KANSAS CITY, KS 66105
Phone: 913 653 8112

Prepared by:
Ron Donze
TRUCK CENTERS, INC.
2280 FORMOSA RD.
TROY, IL 62294
Phone: 618-667-3454

Dimensions	Inches
Bumper to Back of Cab (BBC)	106.3
Bumper to Centerline of Front Axle (BA)	40.7
Min. Cab to Body Clearance (CB)	3.0
Back of Cab to Centerline of Rear Axle(s) (CA)	156.4
Effective Back of Cab to Centerline of Rear Axle(s) (Effective CA)	153.4
Back of Cab Protrusions (Exhaust/Intake) (CP)	1.5
Back of Cab Protrusions (Side Extenders/Trim Tab) (CP)	0.0
Back of Cab Protrusions (CNG Tank)	0.0
Back of Cab Clearance (CL)	3.0
Back of Cab to End of Frame	252.4
Cab Height (CH)	67.4
Wheelbase (WB)	222.0
Frame Overhang (OH)	96.0
Overall Length (OAL)	358.7
Rear Axle Spacing	51.0
Unladen Frame Height at Centerline of Rear Axle	39.9

Performance calculations are estimates only. If performance calculations are critical, please contact Customer Application Engineering.

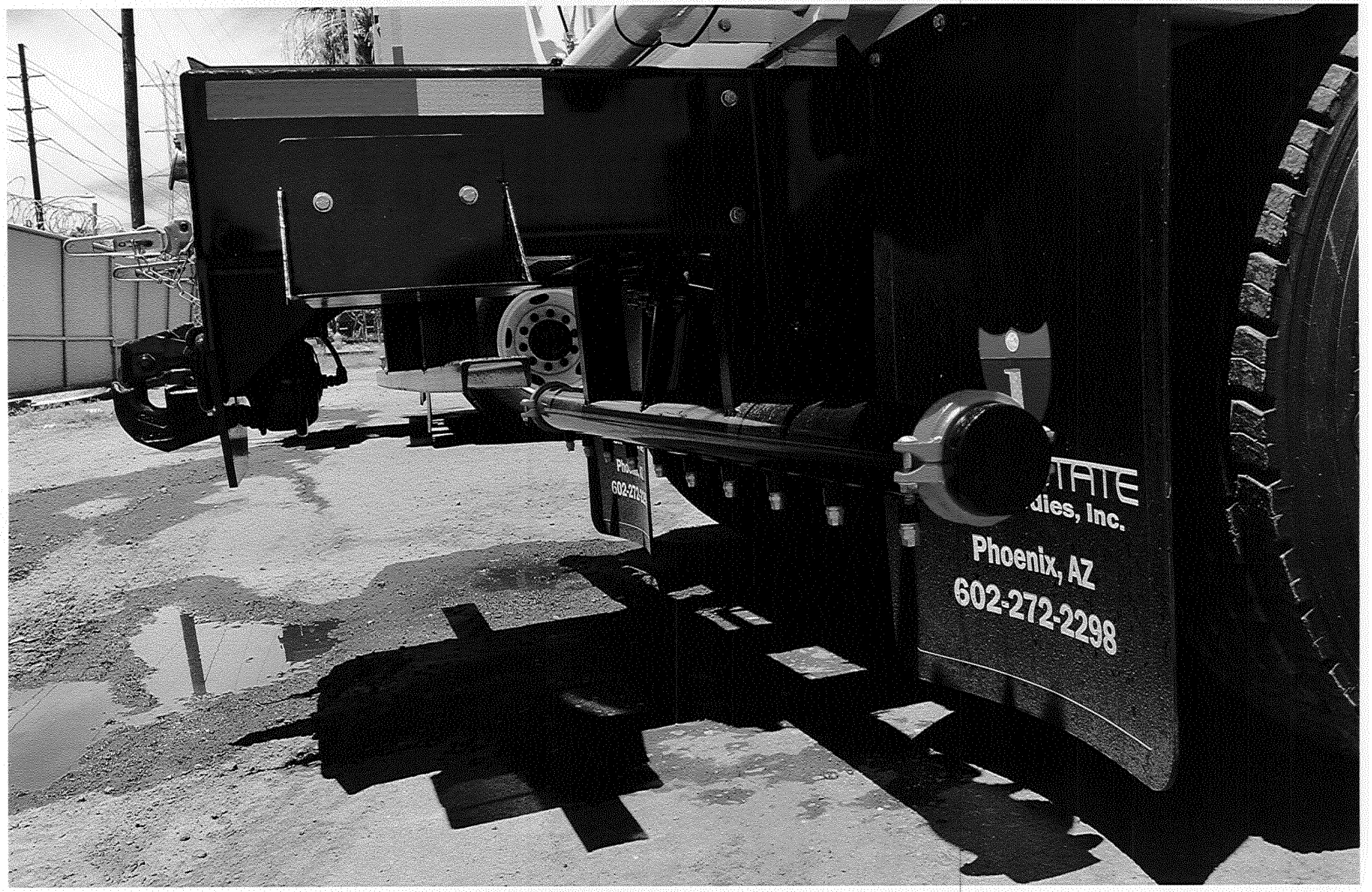
TATE
dies, Inc.
Phoenix, AZ
602-272-2298

RESOLUTION 16-34:

A RESOLUTION HONORING THE SERVICE OF MR. RICHARD ASHTON TO THE VILLAGE OF PINEHURST PLANNING AND ZONING BOARD AND BOARD OF ADJUSTMENT

THAT WHEREAS, the Village Council of Pinehurst, North Carolina, wishes to acknowledge and express its appreciation to Mr. Richard Ashton for his dedicated service to the citizens of Pinehurst as the Chairman of the Board of Adjustment and as a member of the Planning and Zoning Board; and

WHEREAS, Mr. Ashton was first appointed as a member of the Planning and Zoning Board on November 16, 2010 and served continuously and faithfully from that time; and

WHEREAS, Mr. Ashton was appointed as the Board of Adjustment Chairperson on March 13, 2012 and served in that capacity until November 30, 2016.

WHEREAS, Mr. Ashton helped lead the efficient operation of the Board of Adjustment, always conducting the Village's business in a courteous, professional manner; and

WHEREAS, Mr. Ashton was instrumental in making sure the Board of Adjustment met all applicable legal requirements and carefully weighed all evidence and testimony to ensure due process for all applicants before the board;

AND WHEREAS, Mr. Ashton was involved in numerous reviews of significant development in Pinehurst and its extraterritorial jurisdiction in which he always ensured that the Board of Adjustment and the Planning and Zoning Board fully examined all of the aspects of the proposed development and provided the best possible recommendation to the Village Council concerning each development or land use request.

NOW, THISEFORE, BE IT RESOLVED by the Village Council of Pinehurst, North Carolina, in a regular meeting assembled this 13th day of December, 2016 as follows:

SECTION 1. That the Village Council hereby expresses on behalf of the citizens of Pinehurst, deep appreciation and gratitude for the gifts of time, ability, and determination given as the Chairman of the Board of Adjustment and as a member of the Planning and Zoning Board.

SECTION 2. That the Village Manager is hereby directed to have a copy of this Resolution presented to Mr. Ashton as a token of our gratitude.

THIS RESOLUTION passed and adopted this 13th day of December, 2016.

VILLAGE OF PINEHURST
VILLAGE COUNCIL

(Municipal Seal)

By: _____

DRAFT

Nancy Foy Fiorillo, Mayor

Attest:

_____
Lauren M. Craig, Village Clerk

Approved as to Form:

_____
Michael J. Newman, Village Attorney

DRAFT